TECHNICAL DATA

TYPE SHZV VACUUM ON-LOAD TAP CHANGER FOR OIL-IMMERSED TRANSFORMER

HM0.154.3901-02.06/2018

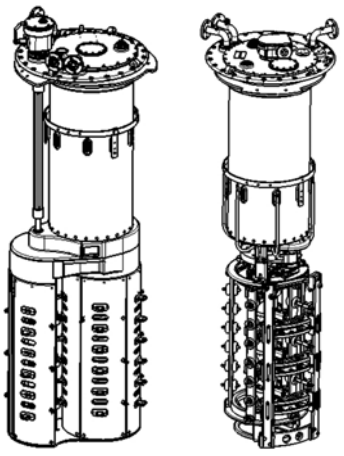

SHZV(cylinder tap selector) SHZV(cage tap selector)

SHANGHAI HUAMING POWER EQUIPMENT CO., LTD.

General

1. General……3
2. Technical specifications……4
3. Type designation……6
4. Terms and definitions ……8
5. Special designs ……13
6. Motor drive unit ……15
7. Operation controllers ……15
8. Accessories……16
9. Appendixes……16
Appendix 1 SHZV III 400/600/1000A overall dimensions without change-over selector, cylinder tap selector……17
Appendix 2 SHZV III 400/600/1000A overall dimensions with reversing switch, cylinder tap selector……18
Appendix 3 SHZV III 400/600/1000A overall dimensions with coarse change-over selector, cylinder tap selector……19
Appendix 4 SHZV III 1300A overall dimensions without change-over selector, cylinder type……20
Appendix 5 SHZV III 1300A overall dimensions with reversing change-over selector, cylinder type……21
Appendix 6 SHZV III 1300A overall dimensions with coarse & fine change-over selector, cylinder type……22
Appendix 7 SHZV III 400/600A overall dimensions with reversing switch, cage tap selector……23
Appendix 8 SHZV I 400/600/1000A overall dimensions without change-over selector, cylinder tap selector ……24
Appendix 9 SHZV I 400/600/1000A overall dimensions with reversing switch, cylinder tap selector……25
Appendix 10 SHZV I 400/600/1000A overall dimensions with coarse change-over selector, cylinder tap selector ……26
Appendix 11 SHZV I 1600A overall dimensions without change-over selector, cylinder tap selector……27
Appendix 12 SHZV I 1600A overall dimensions with reversing switch, cylinder tap selector……28
Appendix 13 SHZV I 1600A overall dimensions with coarse and fine change-over selector, cylinder tap selector ……29
Appendix 14 SHZV I 2400A overall dimensions without change-over selector, cylinder tap selector……30
Appendix 15 SHZV I 2400A overall dimensions with reversing switch, cylinder tap selector……31
Appendix 16 SHZV I 2400A overall dimensions with coarse and fine change-over selector, cylinder tap selector……32
Appendix 17 SHZV I 3000A overall dimensions without change-over selector, cylinder type ……33
Appendix 18 SHZV 1300A overall dimensions with reversing change-over selector, cylinder type……34
Appendix 19 SHZV 3000A overall dimensions with coarse & fine change-over selector, cylinder type……35
Appendix 20 SHZV I 400/600A overall dimensions with reversing switch, cage tap selector……36
Appendix 21 SHZV I 1200A overall dimensions with reversing switch, cage tap selector……37
Appendix 22 SHZV I 1500A overall dimensions with reversing switch, cage tap selector ……38
Appendix 23 SHZV III 400/600/1000A (ZnO protection) overall dimensions without change-over selector, cylinder tap selector…39
Appendix 24 SHZV III 400/600/1000A(ZnO protection) overall dimensions with reversing switch, cylinder tap selector ……40
Appendix 25 SHZV III 400/600/1000A (ZnO protection) overall dimensions with coarse change-over selector, cylinder tap selector……41
Appendix 26 SHZV III 400/600A(ZnO protection) overall dimensions, with reversing switch, cage tap selector ……42
Appendix 27 SHZV I 1000A (ZnO protection) overall dimensions without change-over selector, cylinder type……43
Appendix 28 SHZV I 1000A (ZnO protection) overall dimensions with reversing switch, cylinder type……44
Appendix 29 SHZV I 1000A (ZnO protection) overall dimensions with coarse & fine change-over selector, cylinder type……45
Appendix 30 SHZV I 400/600A/1000A (ZnO protection) overall dimensions without change-over selector, cylinder tap selector ··46
Appendix 31 SHZV I 400/600A/1000A (ZnO protection) overall dimensions with reversing switch, cylinder tap selector ……47
Appendix 32 SHZV I 400/600A/1000A (ZnO protection) overall dimensions with coarse & fine change-over selector, cylinder tap selector……48
Appendix 33 SHZV I 1600A (ZnO protection) overall dimensions without change-over selector, cylinder tap selector ……49
Appendix 34 SHZV I 1600A (ZnO protection) overall dimensions with reversing switch, cylinder tap selector ……50
Appendix 35 SHZV I 1600A (ZnO protection) overall dimensions with coarse & fine change-over selector, cylinder tap selector··51
Appendix 36 SHZV I 2400A (ZnO protection) overall dimensions without change-over selector, cylinder tap selector ……52
Appendix 37 SHZV I 2400A (ZnO protection) overall dimensions with reversing switch, cylinder tap selector ……53
Appendix 38 SHZV I 2400A (ZnO protection) overall dimensions with coarse & fine change-over selector, cylinder tap selector……54

Appendix 39 SHZV I 400/600A (ZnO protection) overall dimensions with reversing switch, cage tap selector·····55
Appendix 40 SHZV I 1200A (ZnO protection) overall dimensions with reversing switch, cage tap selector ·····56
Appendix 41 SHZV I 1500A (ZnO protection) overall dimensions with reversing switch, cage tap selector ·····57
Appendix 42 SHZV tap selector contacts arrangement, cylinder tap selector ·····58
Appendix 43 SHZV tap selector contacts arrangement, cage tap selector ·····59
Appendix 44 SHZV (10050) operating position table and connection diagram·····60
Appendix 45 SHZV (10070) operating position table and connection diagram·····61
Appendix 46 SHZV (10090) operating position table and connection diagram·····62
Appendix 47 SHZV (10100) operating position table and connection diagram·····63
Appendix 48 SHZV (14140) operating position table and connection diagram·····64
Appendix 49 SHZV (10051W) operating position table and connection diagram·····65
Appendix 50 SHZV (10071W) operating position table and connection diagram·····66
Appendix 51 SHZV (10091W) operating position table and connection diagram·····67
Appendix 52 SHZV (10191W) operating position table and connection diagram·····68
Appendix 53 SHZV (10191G) operating position table and connection diagram ·····69
Appendix 54 SHZV (10193W) operating position table and connection diagram·····70
Appendix 55 SHZV (10193G) operating position table and connection diagram·····71
Appendix 56 SHZV (12111W) operating position table and connection diagram·····71
Appendix 57 SHZV (12231W) operating position table and connection diagram·····72
Appendix 58 SHZV (12231G) operating position table and connection diagram·····73
Appendix 59 SHZV (12233W) operating position table and connection diagram·····74
Appendix 60 SHZV (14131W) operating position table and connection diagram·····75
Appendix 61 SHZV (14271W) operating position table and connection diagram·····76
Appendix 62 SHZV (14273W) operating position table and connection diagram·····77
Appendix 63 SHZV (18351W) operating position table and connection diagram·····78
Appendix 64 SHZV (18351G) operating position table and connection diagram·····79
Appendix 65 SHZV (18353W) operating position table and connection diagram·····80
Appendix 66 SHZV bell-type head flange overall dimension, cylinder tap selector ·····81
Appendix 67 SHZV bell-type head flange with pressure relief valve overall dimension, cylinder tap selector·····82
Appendix 68 SHZV supporting flange overall dimension, cylinder tap selector·····83
Appendix 69 Transformer mounting flange for SHZV overall dimension·····84
Appendix 70 By-pass pipe overall dimension·····85
Appendix 71 Bell-type lifting plate, overall dimension·····85
Appendix 72-1 SHZV OLTC mounted with tie-in-resistor on cylinder overall dimension·····86
Appendix 72-2 SHZV OLTC mounted with tie-in-resistor on plate overall dimension, cage tap selector·····86
Appendix 73 Schematic drawing for connecting of horizontal shaft and vertical shaft·····87
Appendix 74 Bevel gearbox, overall dimension·····88
Appendix 75 Middle supporting box, overall dimension ·····89
Appendix 76 Operation key for oil discharge inside tap change oil compartment·····90
Appendix 77 Schematic drawing for connecting of SHZV OLTC and MDU ·····91
Appendix 78 Schematic drawing for 3 units of single-phase SHZV connection arrangement ·····92
Appendix 79 Protective relay, overall dimension·····93
Appendix 80 SHZV bell-type head flange, overall dimension, cage tap selector ·····94
Appendix 81 SHZV bell-type supporting flange, overall dimension, cage tap selector·····95
Appendix 82 SHZV gear mechanism drive shaft position, overall dimension, cage tap selector·····96
Appendix 83 SHZV standard tank type supporting flange, overall dimension, cage tap selector·····97

1. General

Type SHZV vacuum on-load tap changer (herein referred to as tap changer) is of combined structure, applicable to oil-immersed voltage regulating transformers. The tap changer is composed of a diverter switch and a tap selector, immersed in transformer oil. Diverter switch is in a separate oil compartment. Tap selector is in the same transformer oil tank as the windings. Tap changer is to be mounted on transformer tank top by means of bell type mounting through a top flange. Tap changer is operated by a motor drive unit. Tap changer and motor drive unit are connected by an upper gearbox, driving shaft and a bevel gearbox. Tap changer provides both local and remote operation modes.

Tap changer connection includes neutral point of star connection for three-phase and any connection for single phase, Three units of single phase tap changers can be used for any selectable winding connections for a three phase transformer. Its basic connection diagram is shown in Fig. 1 below.

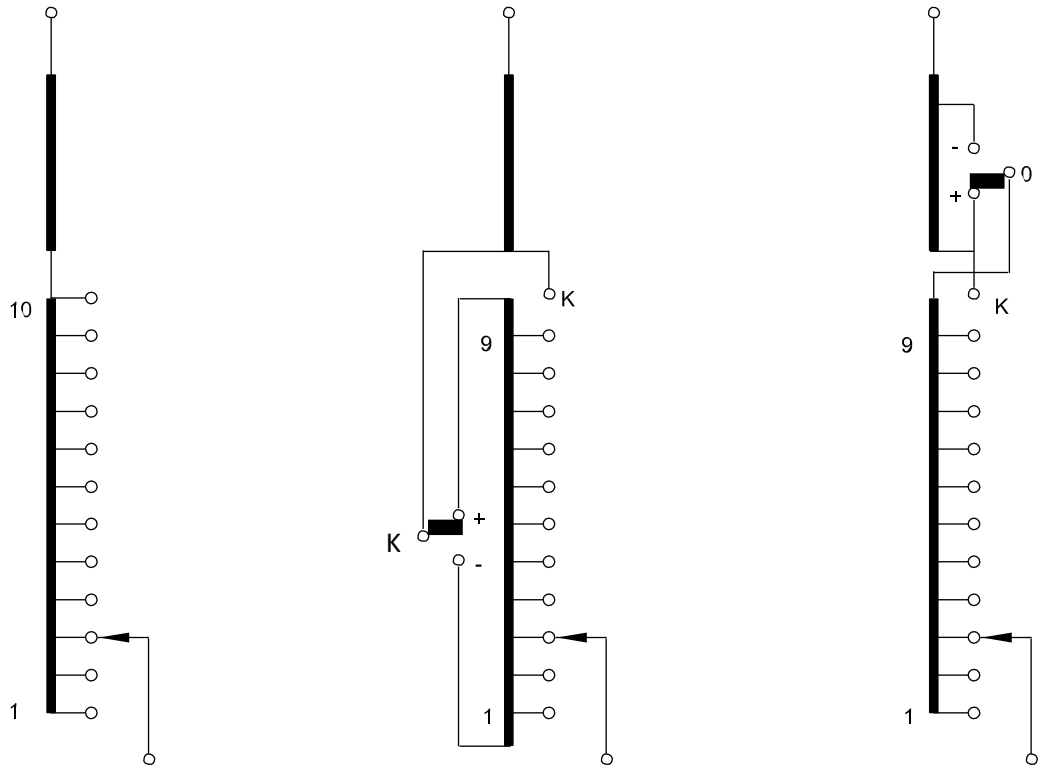

a) Linear regulation b) Reversing regulation c) Coarse/fine regulation

Fig.1 Basic Connection Diagram of Tap Winding

2. Technical specifications

Type SHZV OLTC complies with IEC 60214-1:2014 standard. Tap changer technical data is listed in Table 1-1 and Table 1-2 below.

Table 1-1 Type SHZV (Cylinder Tap Selector) Series of On-Load Tap Changer Technical Data

Item	Description			SHZVIII				SHZVI					
1	Max. rated through current (A)			400	600	1000	1300	400	600	1000	1600	2400	3000
2	Rated frequency (Hz)			50 or 60									
3	Connection			3-phase Y-connection for neutral point only				Single-phase for any selectable winding connection					
4	Max. rated step voltage (V)			4000									
5	Rated step capacity			1500	1600	3000	3300	1500	1600	3000	4400	5600	6000
6	Short-circuit current test (kA)		Thermal (3s)	6	8	12	15	6	8	12	24	24	30
			Dynamic (peak)	15	20	30	37.5	15	20	30	60	60	75
7	Max. operating positions			35 without change-over selector; 107 with change-over selector									
8	Insulation to ground	The highest voltage for equipment (kV)		72.5		126		170		252			
		Rated separate source AC withstand voltage (kV/50Hz,1min)		140		230		350		460			
		Rated lightning impulse withstand voltage (kV,1.2/50μs		350		550		750		1050			
9	Tap selector			Categorized into B, C, D & DE four sizes									
10	Mechanical life			Not less than 1,500,000 operations									
11	Electrical life			Not less than 600,000 operations									
12	Oil compartment of diverter switch		Service pressure	0.03 MPa									
			Leakage test	No leakage under 0.08 MPa for 24 hours									
			Over pressure protection	Rupture disc bursts at 300 ± 20% KPa									
			Protective relay	Set oil flow speed at 1.0m/s ± 10%									
13	Motor drive unit			SHM-D or CMA7									

Note: SHZV with cylinder tap selector is applicable for the contact pitches of 10, 12 and 14 in linear, reversing and coarse and fine regulating.

Table 1-2 Type SHZV (Cage Tap Selector) Series of On-Load Tap Changer Technical Data

Item	Description		SHZVIII		SHZVI		
1	Max. rated through current (A)		400	600	600	1200	1500
2	Rated frequency (Hz)		50 or 60				
3	Connection		3-phase Y-connection for neutral point only		Single-phase for any selectable winding connection		
4	Max. rated step voltage (V)		4000				
5	Rated step capacity		1500	1600	1600	3000	4000
6	Short-circuit current test (kA)	Thermal (3s)	6	8	8	24	24
		Dynamic (peak)	15	20	20	60	60
7	Max. operating positions		18 without change-over selector; 35 with change-over selector				
8	Insulation to ground	The highest voltage for equipment (kV)	1	126	170	252	
		Rated separate source AC withstand voltage(kV/50Hz,1min)	140	230	350	460	
		Rated lightning impulse withstand voltage (kV,1.2/50μs)	350	550	750	1050	
9	Tap selector		Categorized into B, C, D, DE four sizes				
10	Mechanical life		Not less than 1,500,000 operations				
11	Electrical life		Not less than 600,000 operations				
12	Oil compartment of diverter switch	Service pressure	0.03 MPa				
		Leakage test	No leakage under 0.08 MPa for 24 hours				
		Over pressure protection	Rupture disc bursts at 300 ± 20% KPa				
		Protective relay	Set oil flow speed at 1.0m/s ± 10%				
13	Motor drive unit		SHM-D or CMA7				

3. Type designation

3.1. Type designation

Due to the different combinations of number of phases, maximum rated through current, the highest voltage for equipment, selector size and connections, type SHZV comes with various models. Hence, the type designation shall provide all the above technical parameter and below is its detailed explanation in Fig. 2.

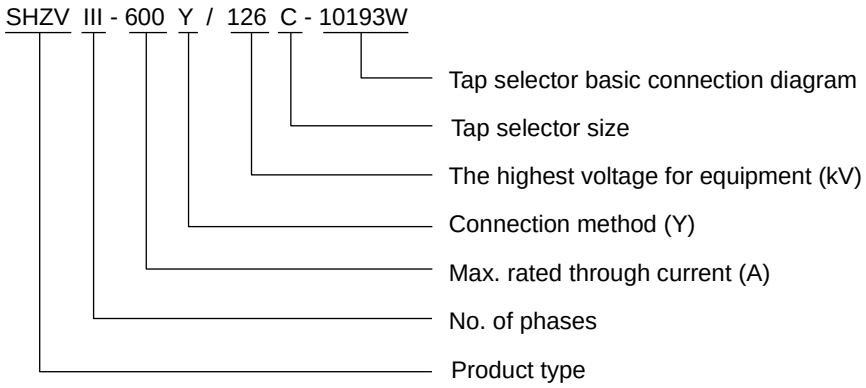

Fig. 2 Tap Changer Type Explanation

3.2. Tap selector basic connection method

Because of voltage regulation range difference and winding connection variations, tap selector has a number of different specifications. Tap selector specification is decided by number of inherent contacts, number of operating positions, number of mid positions and type of change-over selector. Please refer to Fig. 3. for indications of different tap selector parameters.

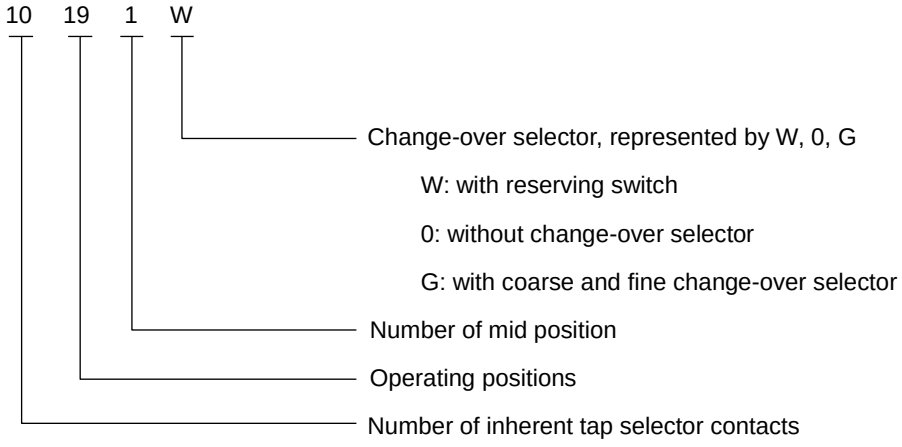

Fig. 3. Tap Selector Basic Connection Method Explanation

3.3. Tap selector basic connection diagram

Different transformer tapping corresponds to different tap selector basic connection diagrams. Fig. 4 shows common basic connection diagrams. Special requirement can also be specially designed.

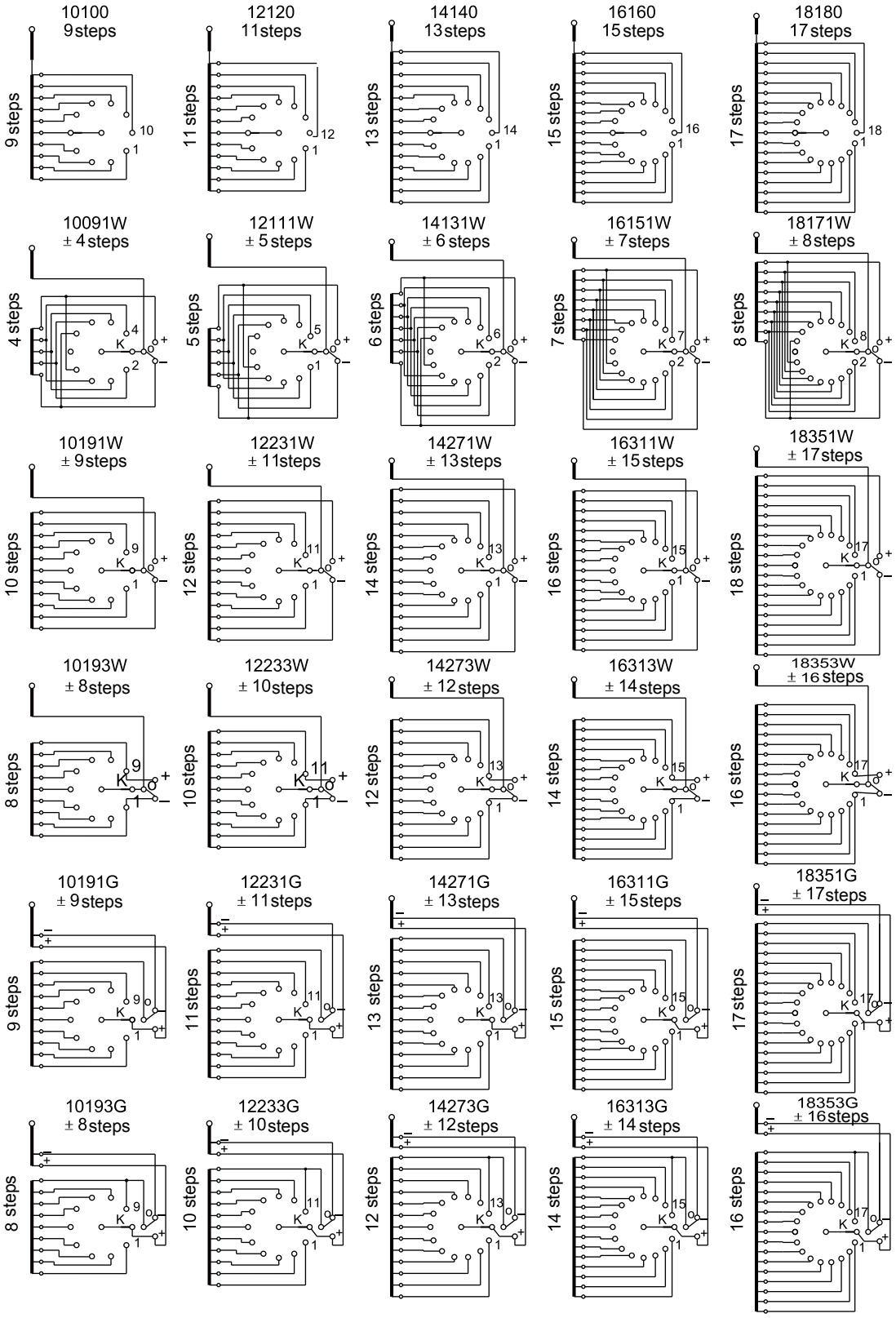

Fig. 4 Tap Selector Basic Connection Diagram

4. Terms and definitions

4.1. Rated through-current

Rated through current I_u: The current flowing through an on-load tap changer toward the external circuit, which can be transferring from one tap to the other at the relevant rated step voltage and which can be carried continuously while meeting the requirement.

Maximum rated through-current I_{um}: The highest rated through-current for which the tap changer is designed for and which forms the basis for all current related tests.

4.2. Step voltage

Rated step voltage U_i: For each value of rated through current, the highest permissible voltage between terminals which are intended to be connected to successive taps of the transformer.

Maximum rated step voltage U_{im}: The highest value of the rated step voltage for which the tap changer is designed. The maximum rated step voltage for type SHZV OLTC is 4000V.

4.3. Breaking capacity

Please refer to Fig.5, Fig.6 for curvy of the rated step capacity.

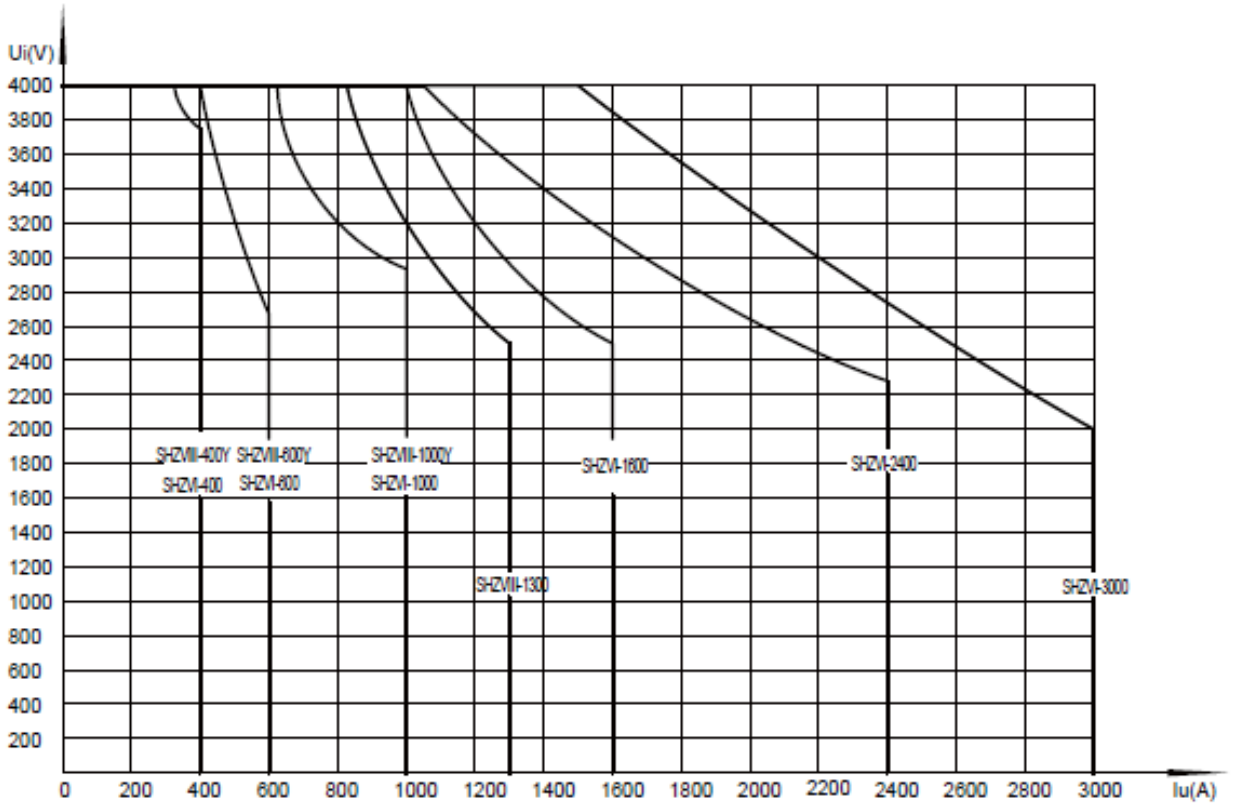

Fig. 5 Curve of SHZV Rated Step Capacity
(Take Cylinder Tap Selector Structure as Example)

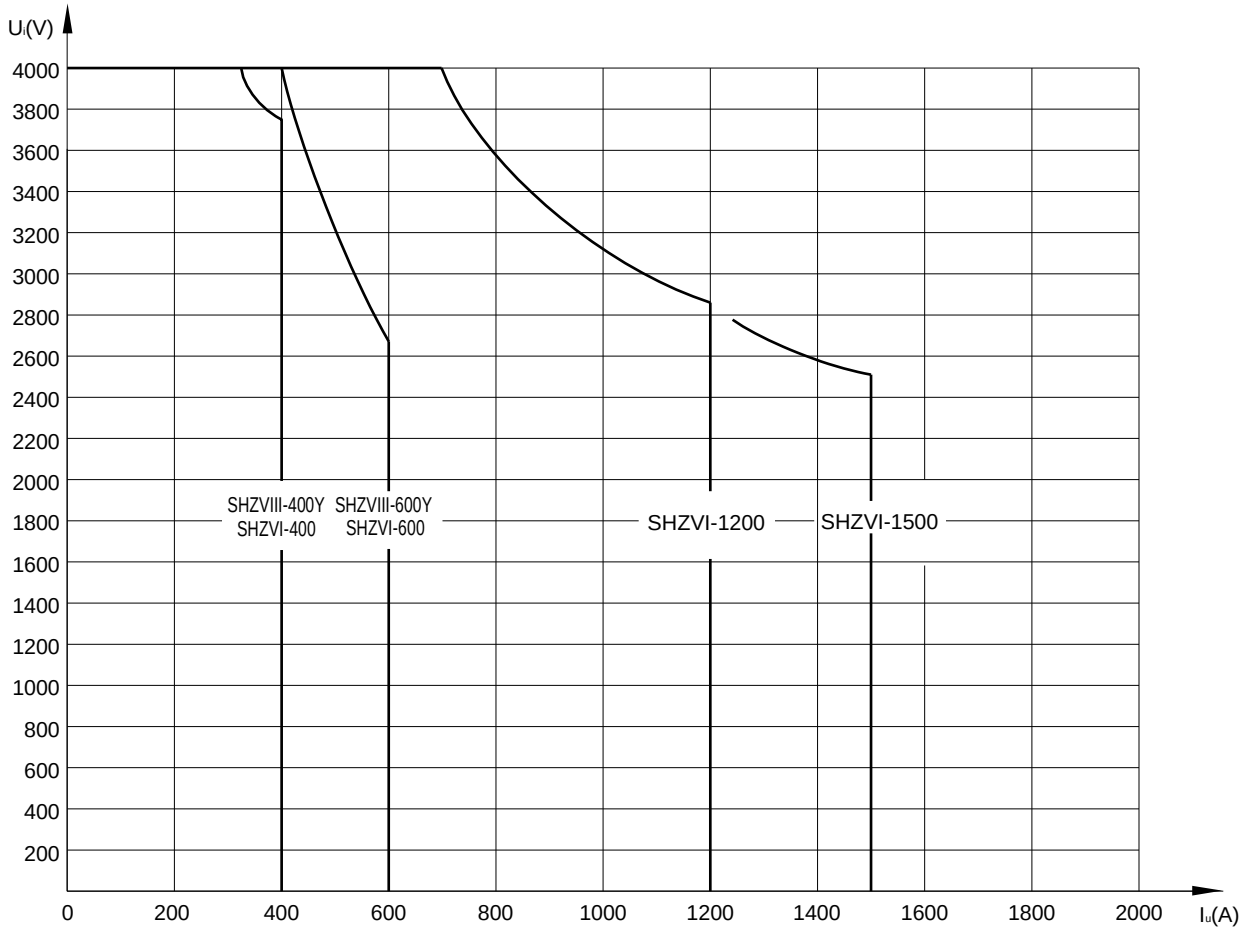

Fig. 6 Curve of SHZV Rated Step Capacity
(Take Cage Tape Selector Structure as Example)

According to stipulations of IEC60214-1: 2014, tap changer shall be able to break two times of maximum rated through- current and its relevant step voltage for 40 operations. Breaking capacity of type SHZV tap changer is

$P_{st.max}=2P_{StN}\approx 2I_{um}\times U_{StN}$ Where,

P_{StN}: rated step capacity

I_{um}: maximum rated through-current

U_{StN}: relevant rated step voltage

4.4. Electrical life of vacuum interrupter

The electrical life of vacuum interrupt is not less than 600,000 operations.

4.5. Short-circuit current test

According to IEC 60214-1: 2014, all contacts continuously carrying the current shall be able to withstand 2s (±10%) short circuit test current without melting, deformation or mechanical damage. Meanwhile the starting peak current value shall be 2.5 (±5%) times of the root means square value of rated short circuit test current. Refer the short circuit test current values to Table 1-1 and Table 1-2 Type SHZV Series of On-Load Tap Changer Technical Data.

4.6. Service condition of tap changer

4.6.1. Service temperature range of tap changer in oil is -25℃ ~ + 105℃

4.6.2. Service ambient air temperature range of tap changer is -25℃ ~ + 40℃ and humidity ≤85%.
If the service ambient temperature is ＞40℃ or ＜-25℃, it should be indicated in the order specifications.
The material and accessories will be specially treated to suit the needs.

4.6.3. Perpendicular deflection between ground and tap changer after being mounting on transformer shall be less than 2%

4.6.4. There shall be no serious dust, explosive gas or corrosive gas on service site
Remark: Please contact us if special application required.

4.7. Tap changer insulation level to earth

Tap changer insulation level to earth is the insulation between tap changer live parts and grounding part. It is determined by dielectric tests according to IEC-60214-1-2014. (Please refer to Table 2) The requirement of which correlates to the transformer tap winding location, regulation range & regulation method, winding connection & arrangement and rated voltage of transformer winding. It's decided by the insulation to earth of transformer tap winding.

Table 2 Tap Changer Insulation Level to Earth

(unit: kV)

The highest voltage for equipment U_m (kV)	Rated separate source AC withstand voltage (kV/50Hz,1min)	Rated lightning impulse withstand voltage (1.2/50μs)
72.5	140	350
126	230	550
170	325	750
252	460	1050

4.8. Internal insulation level of tap changer

The internal insulation level of type SHZV tap changer is categorized into B, C, D, DE four sizes. Refer the internal insulation level to table 3. Basic connection diagram and insulation distance mark is shown in Fig. 7. Internal insulation must be checked when selecting the proper tap changer whether it is qualified for the voltage withstanding requirement.

Table 3 Tap Changer Internal Insulation Level

(unit: kV)

Designation code	Tap selector size B		Tap selector size C		Tap selector size D		Tap selector size DE	
	1.2/50μs	50Hz 1min	1.2/50μs	50Hz 1min	1.2/50μs	50Hz 1min	1.2/50μs	50Hz 1min
a	265	50	365	82	490	105	550	120
b	265	50	350	82	490	146	550	160
a_{01}	90	20	90	20	90	20	90	20
a_{02}	70	20	70	20	70	20	70	20
a1	150	30	150	30	150	30	150	30
c1	500	145	550	180	590	225	660	230
c2	500	145	550	195	590	225	660	250

Note: When a01 represents insulation of spark proection gap, its insulation is 1.2/50 μs,90~130kV, 130kV 100% responsive.

When a02 represents insulation of ZnO proection, its insulation is 1.2/50 μs,50~70kV, 70kV 100% responsive.

4.9. Tap changer mounting method

Type SHZV tap changer is mounted to transformer tank top by a head flange. Hence, a mounting flange shall be provided by transformer producer, the dimension of which shall refer to the drawing of Appendix 52. Type SHZV tap changer is only applicable to bell type mounting. The supporting flange of the tap changer is only for temporary support during the transformer conductor connection. After putting the bell tank, tap changer shall be fixed to the mounting flange of the transformer. The connection pipes on head flange of type SHZV tap changer is of spread around arrangement (Refer details to appendix). Only SHZV with cage tap selector is applicable to standard tank mounting trarsformer (Please refer to Appendix 71 for its supporting flange).

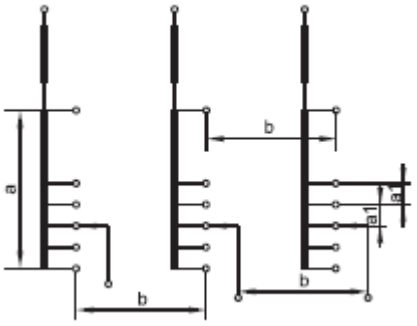

Linear Regulation

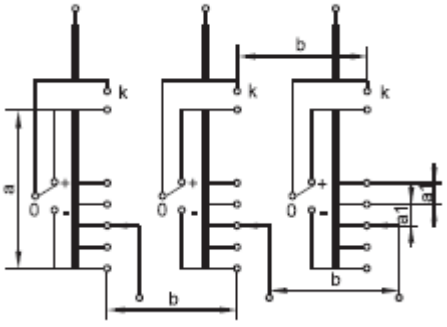

Reversing Regulation

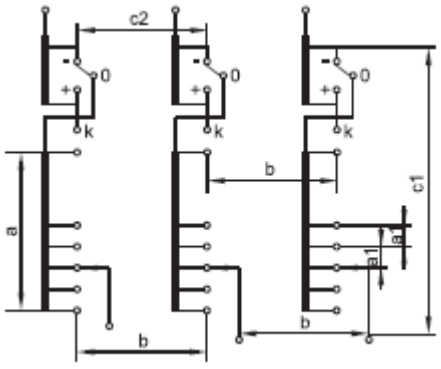

Coarse/Fine Regulation

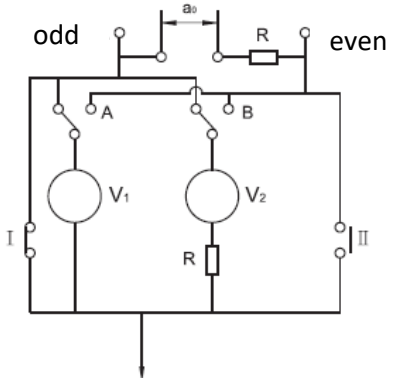

Diverter switch internal insulation

a: between start and end of a fine tap winding; also between start and end of coarse tap winding;
b: between any tapping of different fine tap windings, or between ends of different coarse windings;
a0: between selected and preset diverter switch tapping;
a1: between any selected and preselected taps of the tap selector;
c1: between the start of coarse tap winding and the current take-off terminal for the same phase;
c2: between start contacts (-)of coarse winding for different phases;
A,B: Isolating contact;
V_1: Main breaking vacuum interrupter;
V_2: Transition vacuum interrupter;
R: Resistor;
I: Odd number main contact;
II: Even number main contact.

Fig. 7 Basic Connection Diagram and Insulation Distance Mark

5. Special designs

5.1. Potential connection of the tap winding

For transformers with high voltage rating and big regulation range, during the operation of the change-over selector, the tap winding is disconnected momentarily from the main winding and in a so-called "suspension" status. At that moment, the tap winding takes a new potential which is determined together by the coupling capacitance to ground Ce and coupling capacitance to the adjacent winding Cw (refer details to Fig.9). Usually this potential is different from the previous potential of the tap winding before the operation. The difference between the two is called bias voltage. This bias voltage turns out to be the recovery voltage on the gap of the change-over selector. When the recovery voltage exceeds a certain critical value, the change-over selector would discharge electricity and produce considerable amount of gas. This could be a serious problem. Therefore, potential connection of the tap winding must be considered when this recovery voltage exceeds a certain value, in order to avoid the discharge during the operation of the change-over selector.

The permissible recovery voltage to type SHZV tap changer is 35kV. In case the recovery voltage of the change-over selector exceeds this value, a tie-in resistor with fixed value shall be permanently connected into the tap winding (refer to Fig. 8). The mounting location and dimension of tie-in resistor for SHZV can be found in Appendix.

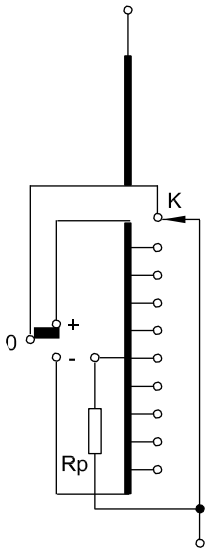

Fig. 8 Potential Connection by Tie-In Resistor

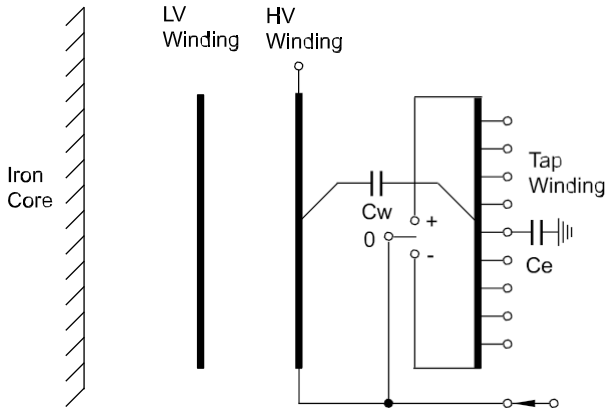

Fig.9 Arrangement of Winding and Coupling Capacitance

For the convenience of Huaming to define the load of the change-over selector and size & quantity of the tie-in resistor, please provide the following transformer data when selecting tap changer:

a) Complete transformer data: rated capacity, rated voltage, regulation range, connection of winding and insulation level, etc.;
b) Arrangement of winding: relative location between tap winding and adjacent winding or winding part;
c) Operating A.C.voltage across windings or layers of windings adjacent to the tap windings;
d) Capacitance between tap winding and adjacent winding(Cw);
e) Capacitance of the tap winding to ground or grounded adjacent windings (if exist) (Ce);
f) Voltage stress across half the tap winding at lightning impulse voltage test;
g) A.C. voltage across half the tap winding under operation and test conditions. (is normally derived from order specification sheet for tap changer) .

5.2 Two phase and single phase of type SHZV

Type SHZV tap changer can be designed as one motor drive unit (or three motor drive unit) driving three single phase tap changers or one two phases plus one single phase tap changer, for regulation of delta connection or other regulation locations other than neutral point.

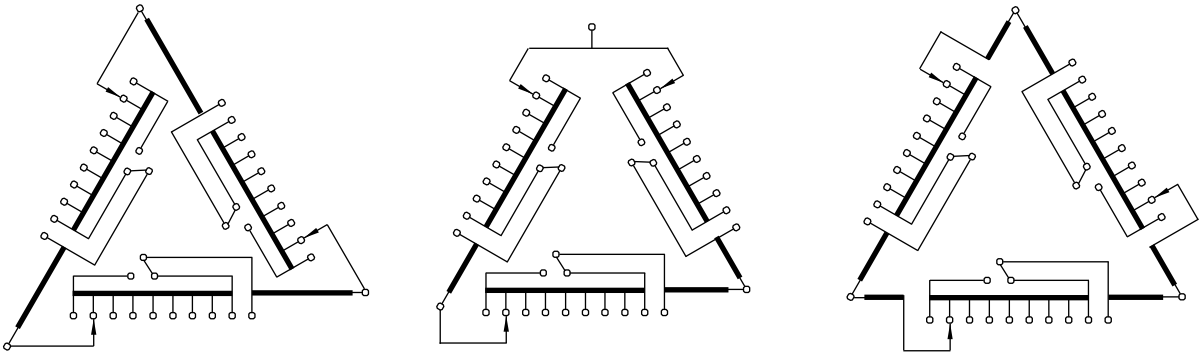

Three Single Phase Regulation at Line End of Delta Connection

One Single Phase + One Twophase Regulation at Line End

Three Single Phase Regulation at Middle of Delta Connection

Fig. 10 Basic Connections for Delta-connected Transformer Winding

5.3 SHZV tap selector structures and application

5.3.1. Cylinder tap selector: It is suitable for the contact pitch of 10, 12 and 14 in linear, reversing and coarse and fine regulating.

5.3.2. Cage tap selector: SHZV cage tap selector is the same as the tap selector of type CM. Thus it can meet the technical data of CM tap selector. The maximum current of SHZV with cage tap selector is 600A for 3-phase and 1500A for single phase. Please refer to CM technical data for connection diagram or contact us.

5.3.3. Please contact us when choosing SHZV with cage tap selector for the drawings (in linear, reversing regulation or in other regulation) which are excluded in this SHZV technical data.

5.4 SHZV step protection and application

SHZV overvoltage between steps a_0 protection can be realized via spark gaps or varistor (ZnO). The spark gap protection mechanism has a simple structure and small size. When the overvoltage attacks, the breakdown first happens to the spark gap so as to protect the insulation between steps. After that, the spark gap must be replaced to ensure the tap-changer's normal operation. The varistor (ZnO) has the same function and better performance. The size, however, is bigger. So usually the spark gap is adopted. If the varistor (ZnO) is needed, please specify in the order specification.

6. Motor drive unit

SHZV OLTC may operate by SHM-D or CMA7 motor drive unit according to the requirement, please refer to table 4 for technical data.

Table 4 Technical Data of Motor Drive Unit

Motor drive unit		SHM-D	CMA7	
Motor	Rated power (W)	750	750	1100
	Rated voltage (V)	200-240 AC	380 3AC	
	Rated current (A)	4	2.0	2.8
	Rate frequency(Hz)	50 or 60	50 or 60	
	Rotate speed (r.p.m.)	330 direct drive	1400	
Rated torque on drive shaft (Nm)		35 static torque	18	26
Revolution of the drive shaft per switching operation		33	33	
Revolution of the hand crank per switching operation		33	33	
Running time per switching operation (s)		about 6	about 5	
Max. operation positions		107	107	
Voltage for control circuit and heater circuit (V)		~ 220	220/AC	
Heater power (W)		100	50	
A.C. voltage test to ground (kV/50Hz, 1min)		2	2	
Approx. weight (kg)		80	90	
Protective degree		IP66	IP56	

7. Operation controllers

7.1. SHM-K controller

SHM-K remote digital controller uses high-resolute color touch screen with a ARM9 chip as its CPU, which has a 400M clock speed, 256M FRASH, 64M RAM, a fast operation speed and huge memory space. The controller is connected with the SHM-D motor drive unit with cables for bilateral digital communication .

SHM-K main technical data is as below:

Working power: 85-264V AC, 50 or 50 Hz / 100-250V DC

Environment temperature: 0℃ to 50℃ Indoor

Comparative humidity: ≤RH95% (no condensation)

7.2. HMC-3C position indicator

HMC-3C OLTC position indicator is a support fitting for CMA7 motor drive unit, it can be used to indicate the OLTC position, and has the function of "1→ N", "STOP", "N→ 1" control as well as remote control indicator lamp, its input is decimal code and output is BCD code. Please refer to HMC-3C manual for details.

HMC-3C technical data is as below. Working voltage: 220V AC
Power frequency: 50Hz
Maximum operation positions: 107
Environment temperature: -10℃ to 40℃ Indoor

Note: Please specify if special voltage required for motor, and control & heater circuit.

8. Accessories

8.1. Bevel gearbox

Bevel gearbox is used for the inter-connection of tap changer horizontal shaft and vertical shaft, in order to transfer the driving torque from motor drive unit to the tap changer. Please refer to Appendix 63 for the overall dimension.

8.2. Protective relay

Protective relay is the one of protective devices for oil-immersed on-load tap changer, when OLTC interior failure produces gas and oil surge, the protective relay contact acts, and switches on to the tripping circuit of the transformer circuit breaker, the transformer will be cut off at once.

Protective relay is mounted onto the connection pipe between OLTC head and oil conservator; make sure that protective relay marked with arrowhead side shall be connected to oil conservator. Please refer to Appendix 68 for the overall dimension.

8.3. Pressure relief device

Pressure relief valve and rupture disc are safety protection devices of the on-load tap changer. In case tap changer has an internal failure, which decomposes the oil in the compartment and produces large amount gas, the internal pressure inside the oil compartment will increase dramatically. If this pressure couldn't be released, tap changer will deform or even explode. Therefore, pressure relief devices can avoid the upgrade of the failure.

Pressure relief valve is a self-sealing relief valve. It opens the cover in case of over pressure and re-closes after the pressure is released, which can be used repeatedly and minimize the liquid loss during the operation.

The rupture disc is a weak point on the top cover of tap changer. Once the pressure in the oil compartment exceeds the set value, the disc will explode to release the over pressure of the compartment, as a result the oil compartment will be prevented from damage.

Pressure relief valve is a low-energy failure protection device. The rupture disc is a high-energy protection device. Tap changer failure usually tends to be high-energy failure. Hence, pressure relief valve is not recommended for tap changer, or use it as an assistant protection besides the rupture disc. Therefore, pressure relief valve is an optional accessory of tap changer for customer to select when ordering the tap changer.

9. Appendixes

Appendix 1. SHZV III 400/600/1000A overall dimensions without change-over selector, cylinder tap selector

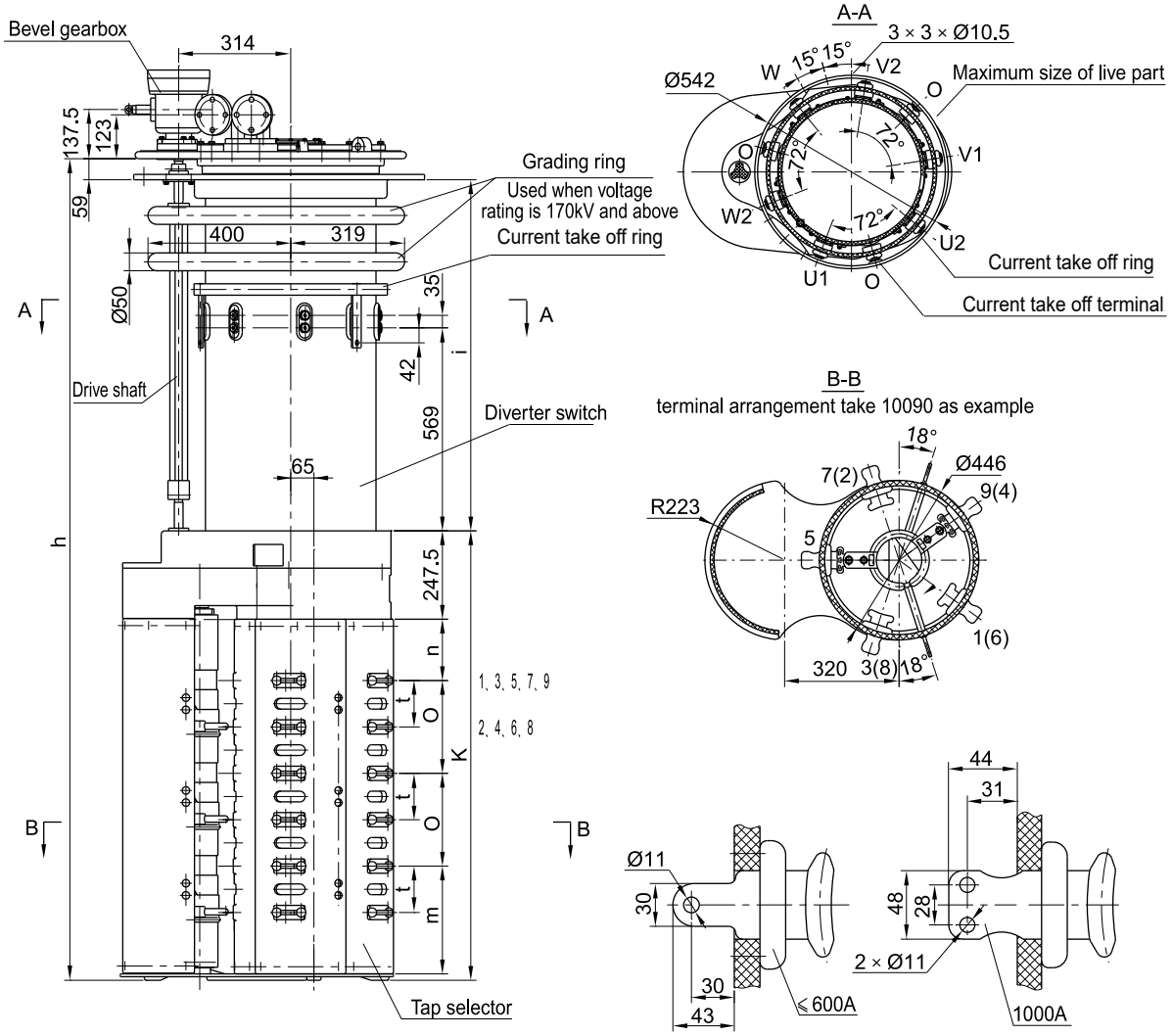

OLTC type		SHZV III 400/600/1000/72.5~252/B				SHZV III 400/600/1000/72.5~252/C				SHZV III 400/600/1000/72.5~252/D/DE			
The highest voltage for equipment(kV)		72.5	126	170	252	72.5	126	170	252	72.5	126	170	252
Dimensions (mm)	h	2127.5	2257.5	2387.5	2487.5	2302.5	2432.5	2562.5	2662.5	2772.5	2902.5	3032.5	3132.5
	i	984	1114	1244	1344	984	1114	1244	1344	984	1114	1244	1344
	k	1084.5				1259.5				1729.5			
	n	147				172				237			
	o	210				260				390			
	t	105				130				195			
	m	252				302				432			
Oil filling dm^3		130	150	1 0	190	130	150	170	190	130	150	170	190
Displacement dm^3		199	224	244	264	200	225	245	265	207	232	252	272
Weight kg		270				275				280			

Unit: mm

Appendix 2. SHZV III 400/600/1000A overall dimensions with reversing switch, cylinder tap selector

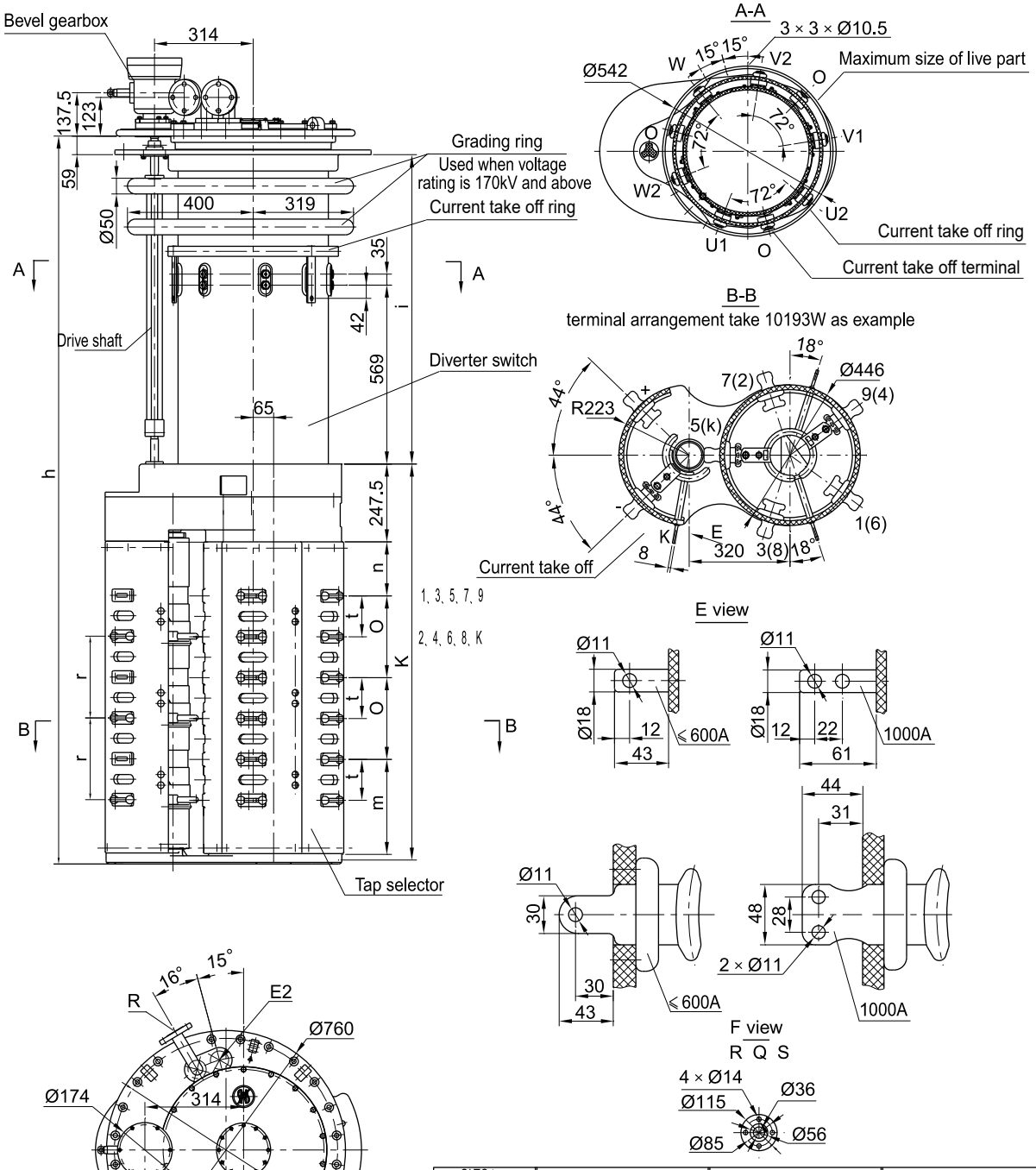

OLTC type		SHZV III 400/600/1000/72.5~252/B				SHZV III 400/600/1000/72.5~252/C				SHZV III 400/600/1000/72.5~252/D/DE			
The highest voltage for equipment(kV)		72.5	126	170	252	72.5	126	170	252	72.5	126	170	252
Dimensions (mm)	h	2127.5	2257.5	2387.5	2487.5	2302.5	2432.5	2562.5	2662.5	2772.5	2902.5	3032.5	3132.5
	i	984	1114	1244	1344	984	1114	1244	1344	984	1114	1244	1344
	k	1084.5				1259.5				1729.5			
	n	147				172				237			
	o	210				260				390			
	t	105				130				195			
	m	252				302				432			
	r	210				260				390			
Oil filling dm^3		130	150	170	190	130	150	170	190	130	150	170	190
Displacement dm^3		199	224	244	264	200	225	245	265	207	232	252	272
Weight kg		285				290				295			

Unit: mm

Appendix 3. SHZV III 400/600/1000A overall dimensions with coarse/fine change-over selector, cylinder tap selector

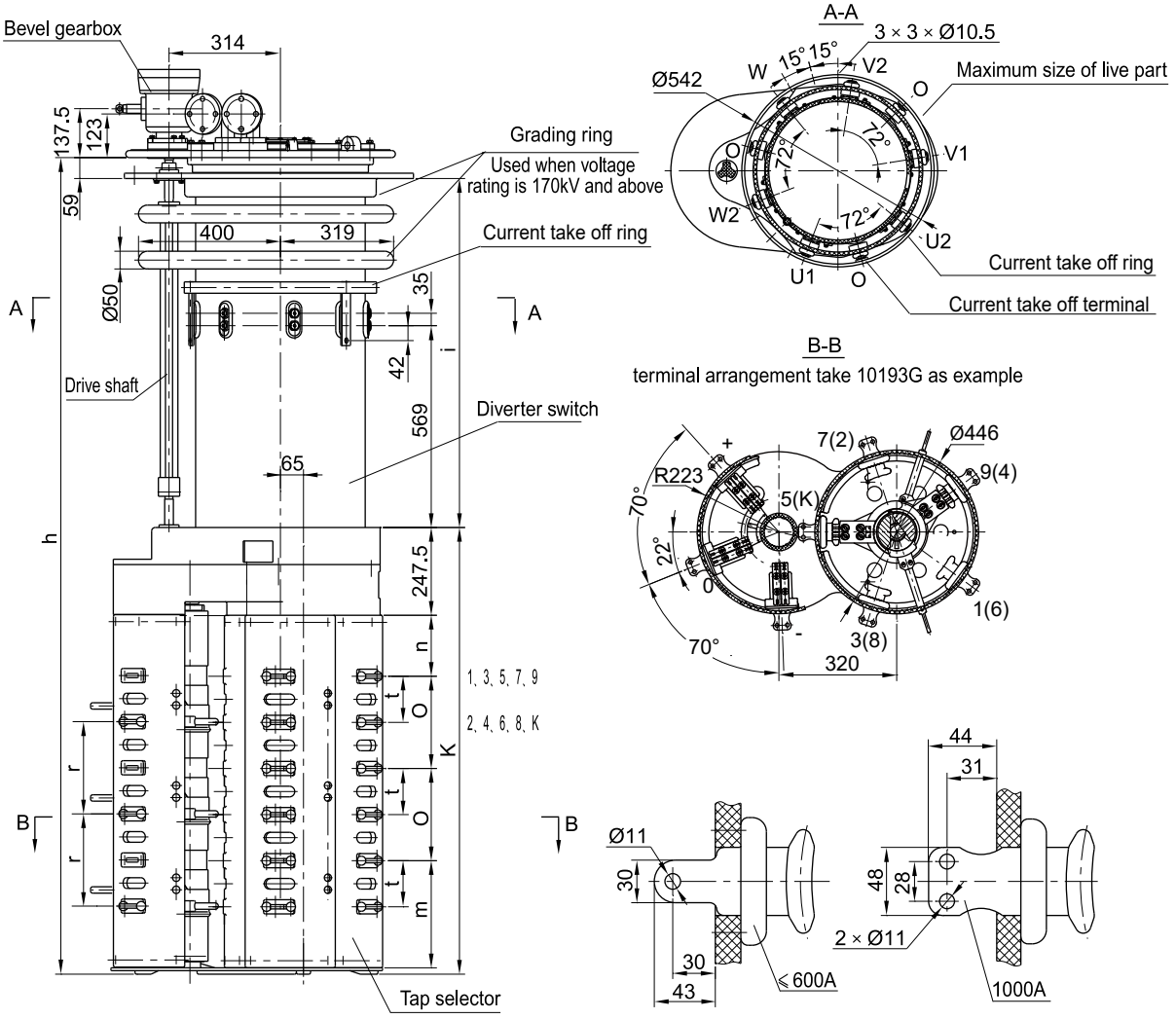

OLTC type		SHZV III 400/600/1000/72.5~252/B				SHZV III 400/600/1000/72.5~252/C				SHZV III 400/600/1000/72.5~252/D/DE			
The highest voltage for equipment		72.5	126	170	252	72.5	126	170	252	72.5	126	170	252
Dimensions (mm)	h	2127.5	2257.5	2387.5	2487.5	2302.5	2432.5	2562.5	2662.5	2772.5	2902.5	3032.5	3132.5
	i	984	1114	1244	1344	984	1114	1244	1344	984	1114	1244	1344
	k	1084.5				1259.5				1729.5			
	n	147				172				237			
	o	210				260				390			
	t	105				130				195			
	m	252				302				432			
	r	210				260				390			
Oil filling dm^3		130	150	170	190	130	150	170	190	130	150	170	190
Displacement dm^3		199	224	244	264	200	225	245	265	207	232	252	272
Weight kg		285				290				295			

Unit: mm

Appendix 4. SHZV III 1300A overall dimensions without change-over selector, cylinder type

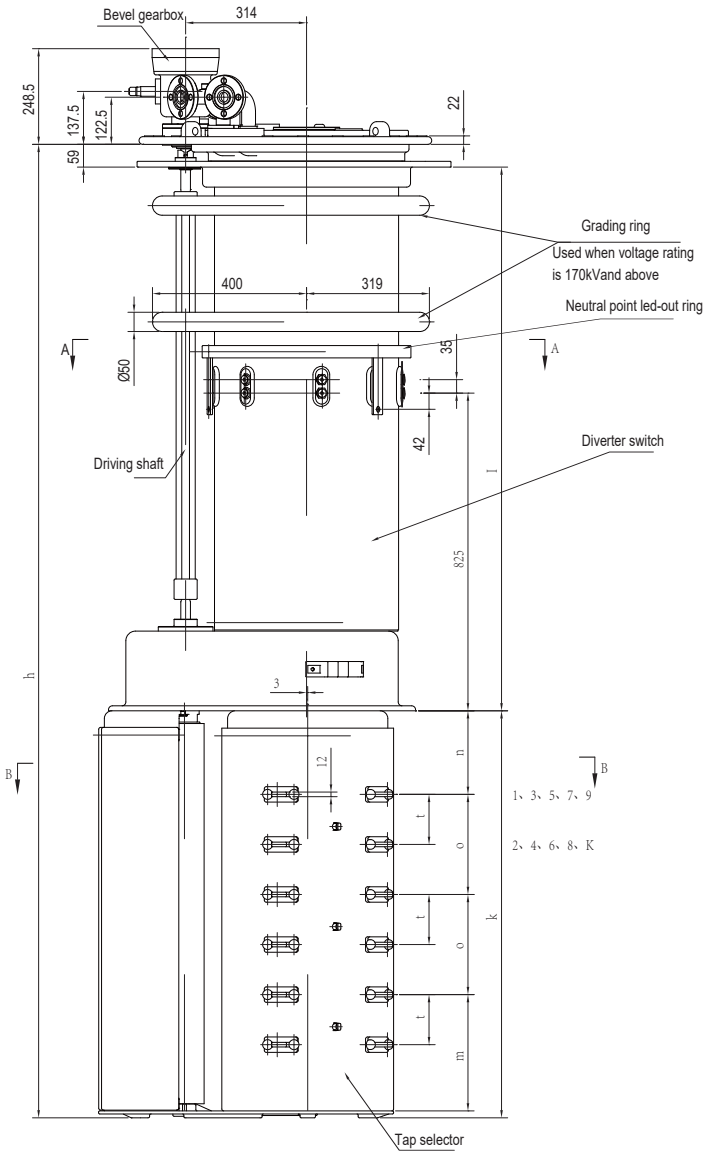

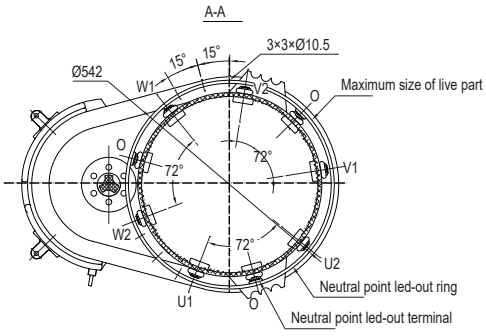

B-B

Terminal arrangement take 10090 as an example

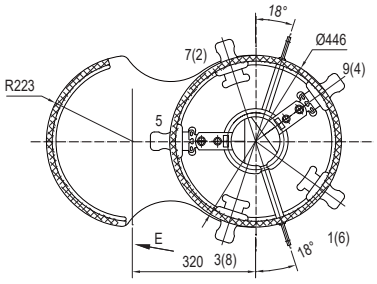

Magnified contact

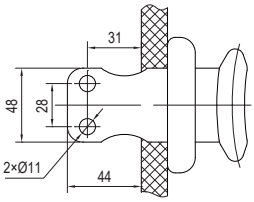

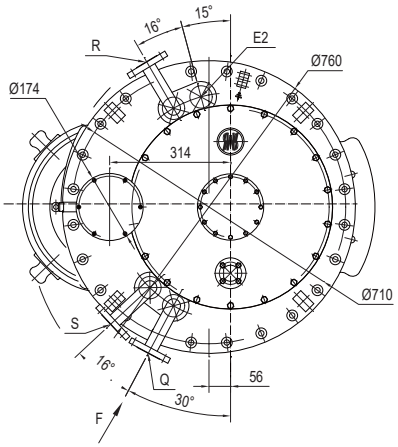

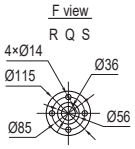

Model		SHZVIII1300/72.5～252/C				SHZVIII1300/72.5～252/D			
Highest voltage for equipment (KV)		72.5	126	170	252	72.5	126	170	252
Dimension	h	2528	2658	2788	2888	2998	3128	3258	3358
	j	1412	1542	1672	1772	1412	1542	1672	1772
	k	1057				1527			
	n	217				282			
	o	260				390			
	t	130				195			
	m	302				432			
Oil filling(dm³)		170	190	210	230	170	190	210	230
Displacement (dm³)		245	265	285	305	252	272	285	305
Weight (Kg)		305				310			

Unit: mm

Appendix 5. SHZV III 1300A overall dimensions with reversing change-over selector, cylinder type

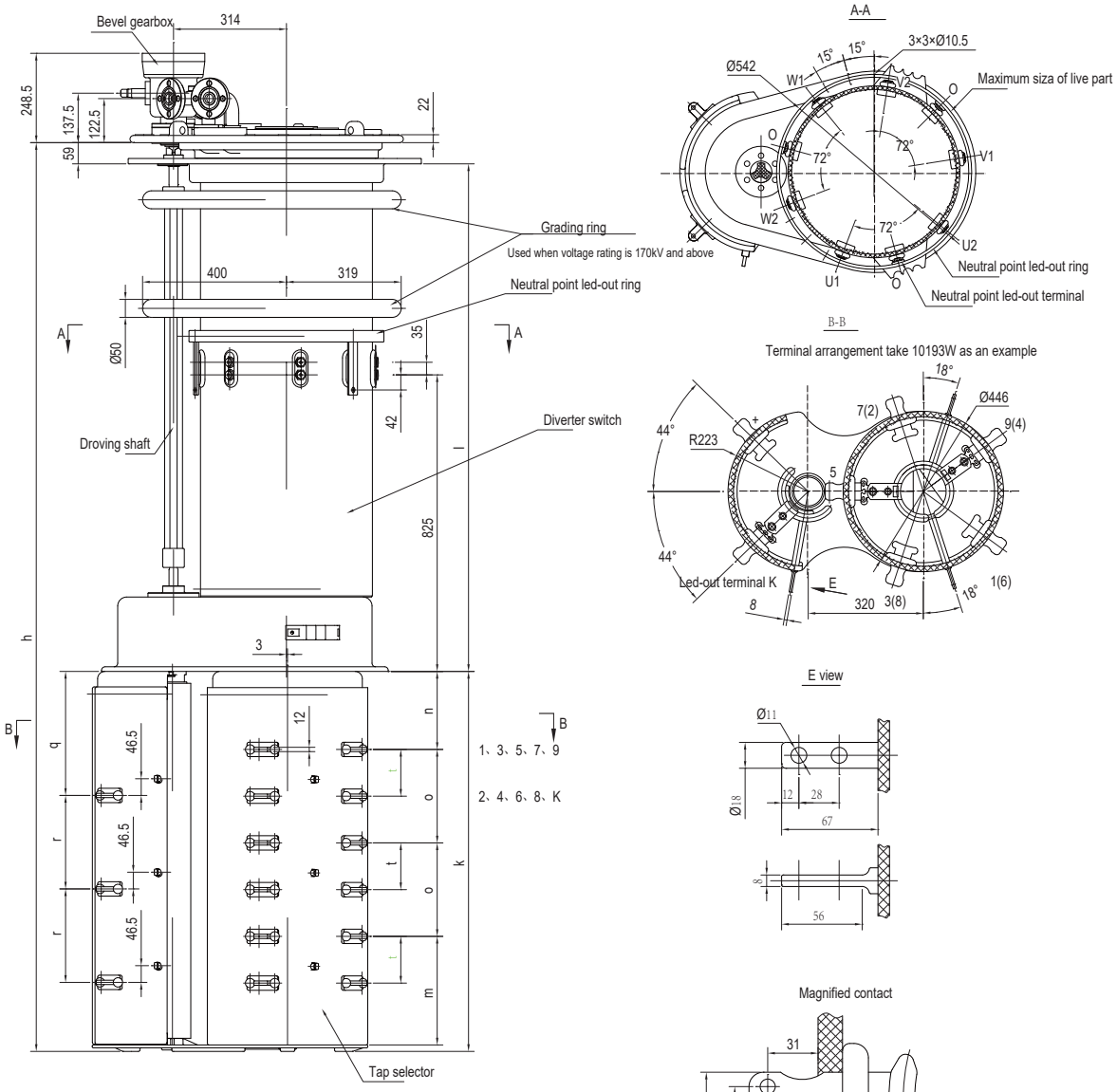

Model		SHZVIII 1300/72.5～252/C				SHZVIII1300/72.5～252/D			
Highest voltage for equipment (kV)		72.5	126	170	252	72.5	126	170	252
Dimensions (mm)	h	2528	2658	2788	2888	2998	3128	3258	3358
	i	1412	1542	1672	1772	1412	1542	1672	1772
	k	1057				1527			
	n	217				282			
	o	260				390			
	t	130				195			
	m	302				432			
	q	345				475			
	r	260				390			
Oil filling (dm^3)		170	190	210	230	170	190	210	230
Displacement (dm^3)		245	265	285	305	252	272	285	305
Weight (kg)		305				310			

Unit: mm

Appendix 6. SHZV III 1300A overall dimensions with coarse & fine change-over selector, cylinder type

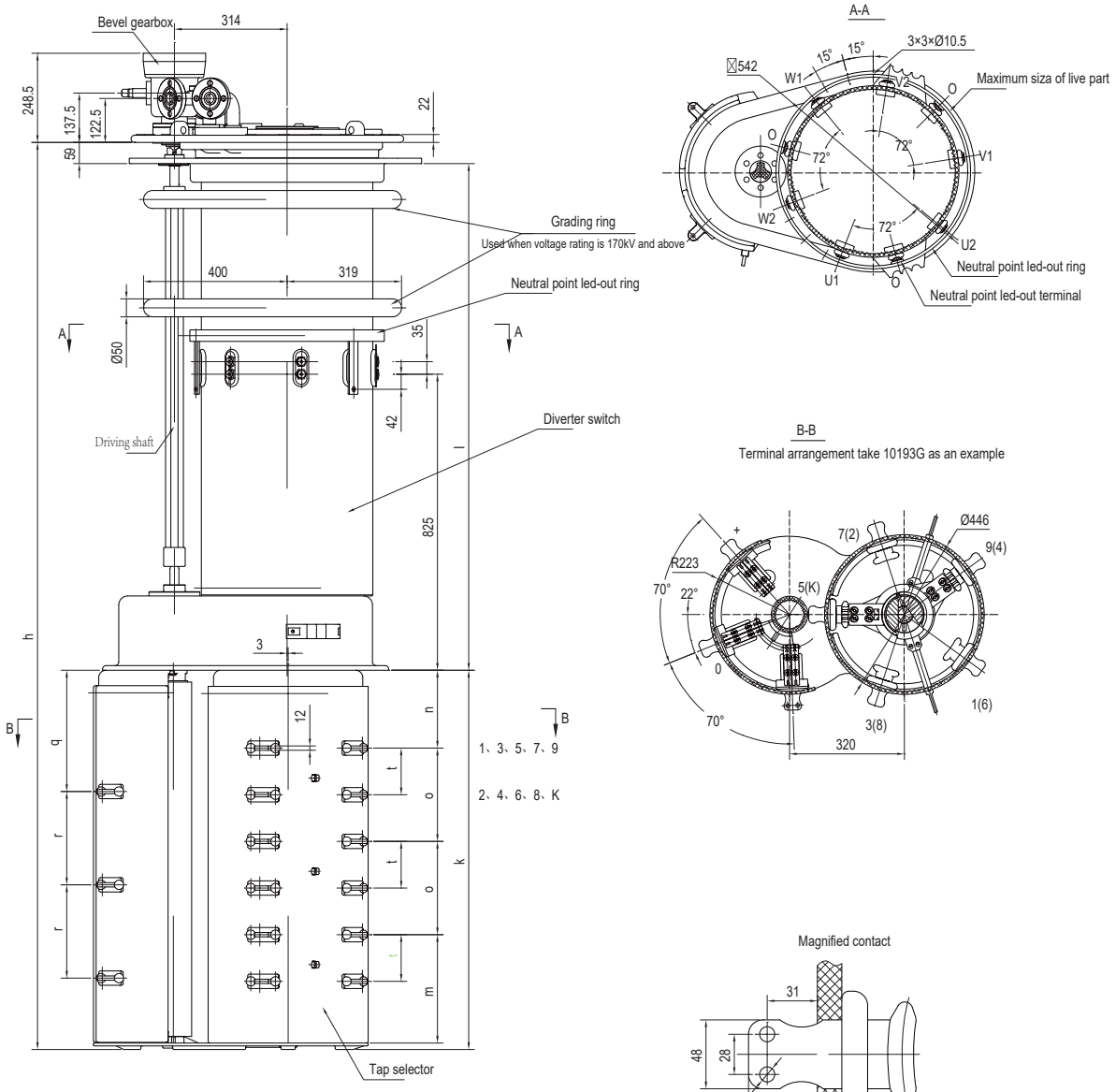

Model		SHZV|II1300/72.5～252/C				SHZV|II1300/72.5～252/D			
Highest voltage for equipment (KV)		72.5	126	170	252	72.5	126	170	252
Dimensions (mm)	h	2528	2658	2788	2888	2998	3128	3258	3358
	i	1412	1542	1672	1772	1412	1542	1672	1772
	k	1057				1527			
	n	217				282			
	o	260				390			
	t	130				195			
	m	302				432			
	q	338				468			
	r	260				390			
Oil filling (dm³)		170	190	210	230	170	190	210	230
Displacement (dm³)		245	265	285	305	252	272	285	305
Weight (Kg)		305				310			

Unit: mm

Appendix 7. SHZV III 400/600A overall dimensions with reversing switch, cage tap selector

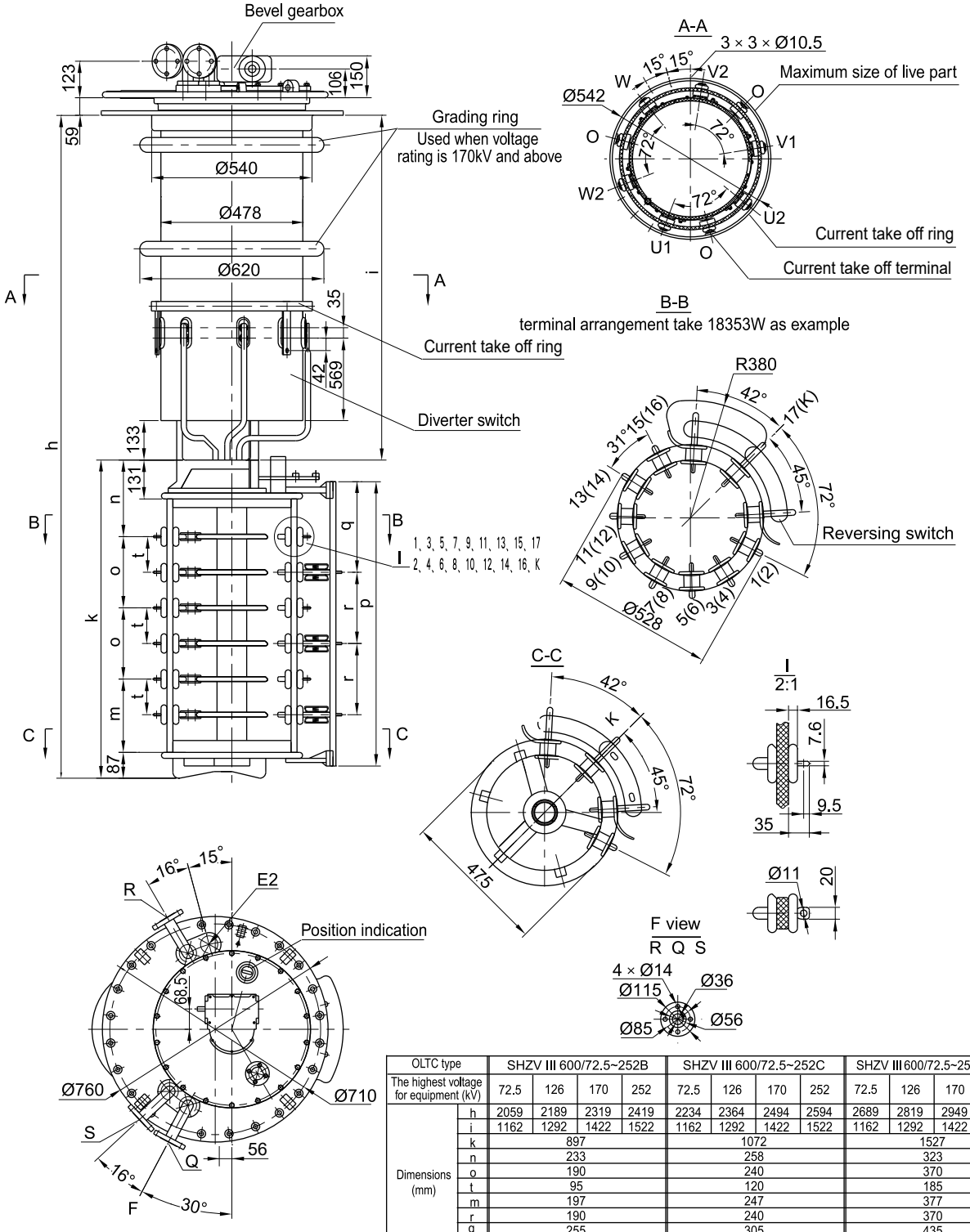

OLTC type		SHZV III 600/72.5~252B				SHZV III 600/72.5~252C				SHZV III 600/72.5~252D/DE			
The highest voltage for equipment (kV)		72.5	126	170	252	72.5	126	170	252	72.5	126	170	252
Dimensions (mm)	h	2059	2189	2319	2419	2234	2364	2494	2594	2689	2819	2949	3049
	i	1162	1292	1422	1522	1162	1292	1422	1522	1162	1292	1422	1522
	k	897				1072				1527			
	n	233				258				323			
	o	190				240				370			
	t	95				120				185			
	m	197				247				377			
	r	190				240				370			
	q	255				305				435			
	p	783				958				1413			
Oil filling dm^3		130	150	170	190	130	150	170	190	130	150	170	190
Displacement dm^3		199	224	244	264	200	225	245	265	207	232	252	272
Weight kg		280				285				290			

Unit: mm

Appendix 8. SHZV I 400/600/1000A overall dimensions without change-over selector, cylinder tap selector

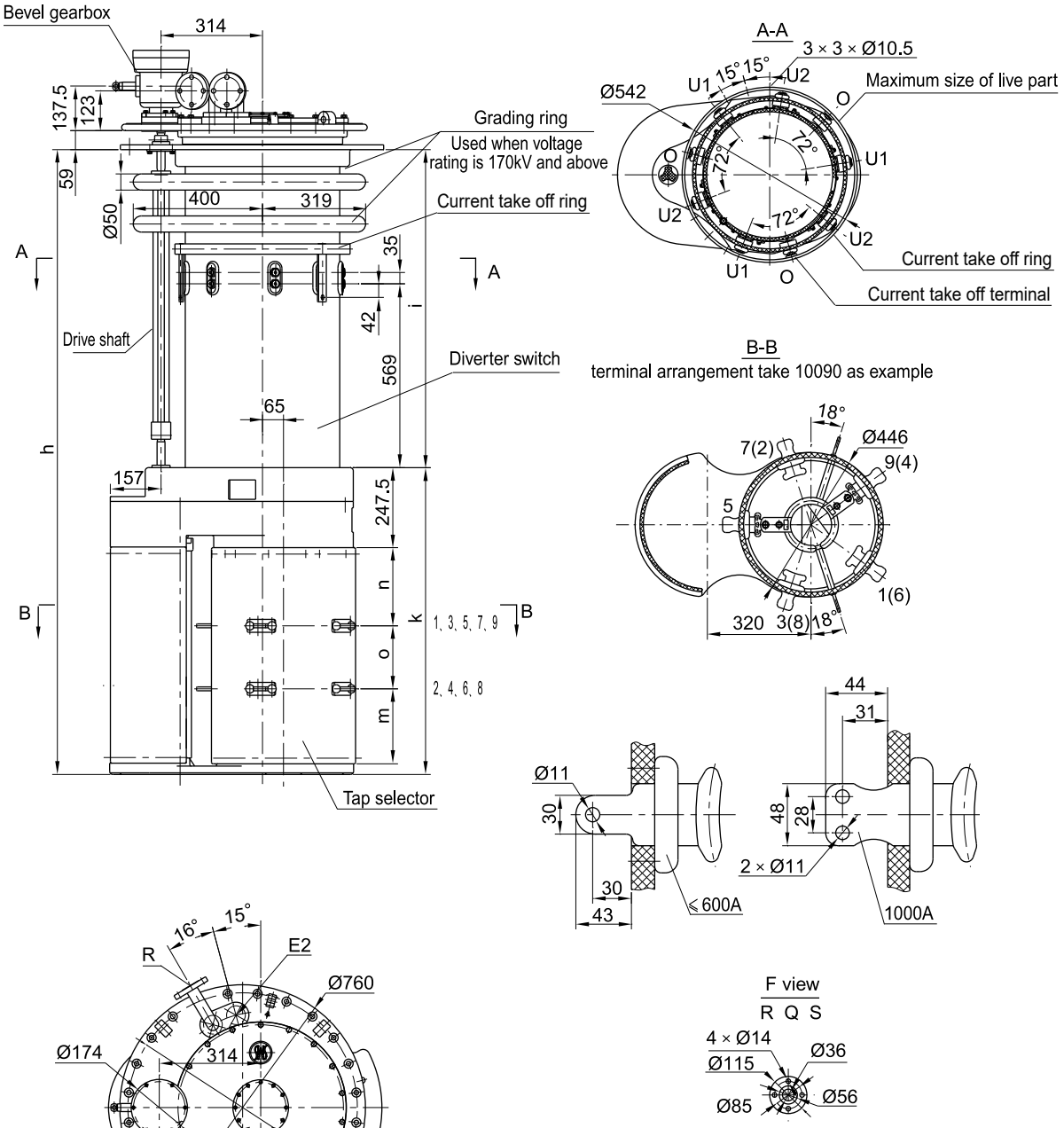

OLTC type		SHZV I 400/600/1000/72.5~252/C				SHZV I 400/600/1000/72.5~252/D/DE			
The highest voltage for equipment(kV)		72.5	126	170	252	72.5	126	170	252
Dimensions (mm)	h	1822.5	1952.5	2085.5	2185.5	1992.5	2122.5	2252.5	2352.5
	i	984	1114	1244	1344	984	1114	1244	1344
	k	779.5				949.5			
	n	172				242			
	o	130				195			
	m	197				232			
Oil filling dm³		130	150	170	190	130	150	170	190
Displacement dm³		200	225	245	265	207	232	252	272
Weight kg		265				270			

Unit: mm

Appendix 9. SHZV I 400/600/1000A overall dimensions with reversing switch, cylinder tap selector

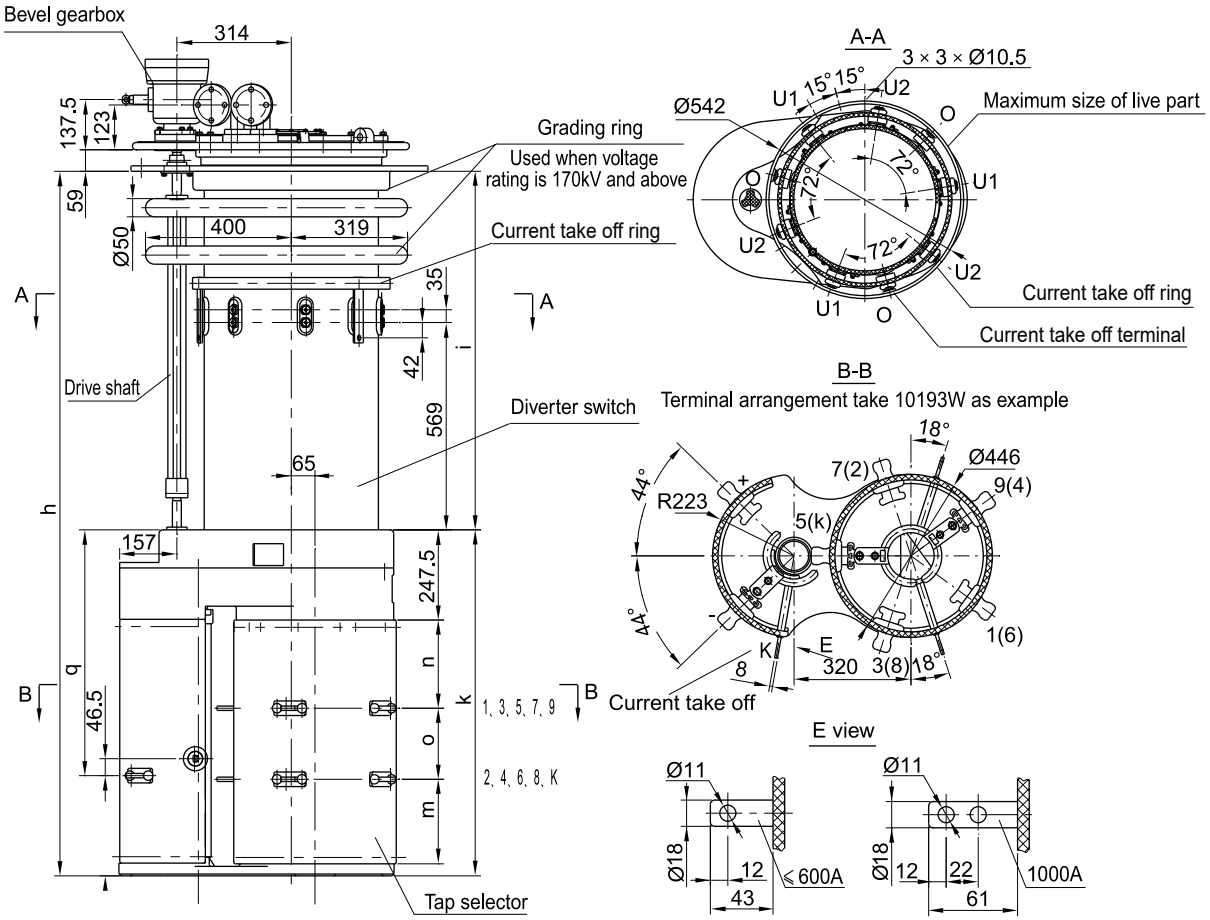

OLTC type		SHZV I 400/600/1000/72.5~252/C				SHZV I 400/600/1000/72.5~252/D/DE			
The highest voltage for equipment(kV)		72.5	126	170	252	72.5	126	170	252
Dimensions (mm)	h	1822.5	1952.5	2085.5	2185.5	1992.5	2122.5	2252.5	2352.5
	i	984	1114	1244	1344	984	1114	1244	1344
	k	779.5				949.5			
	n	172				242			
	o	130				195			
	m	197				232			
	q	539.5				674.5			
Oil filling dm^3		130	150	170	190	130	150	170	190
Displacement dm^3		200	225	245	265	207	232	252	272
Weight kg		270				275			

Unit: mm

Appendix 10. SHZV I 400/600/1000A overall dimensions with coarse/fine change-over selector, cylinder tap selector

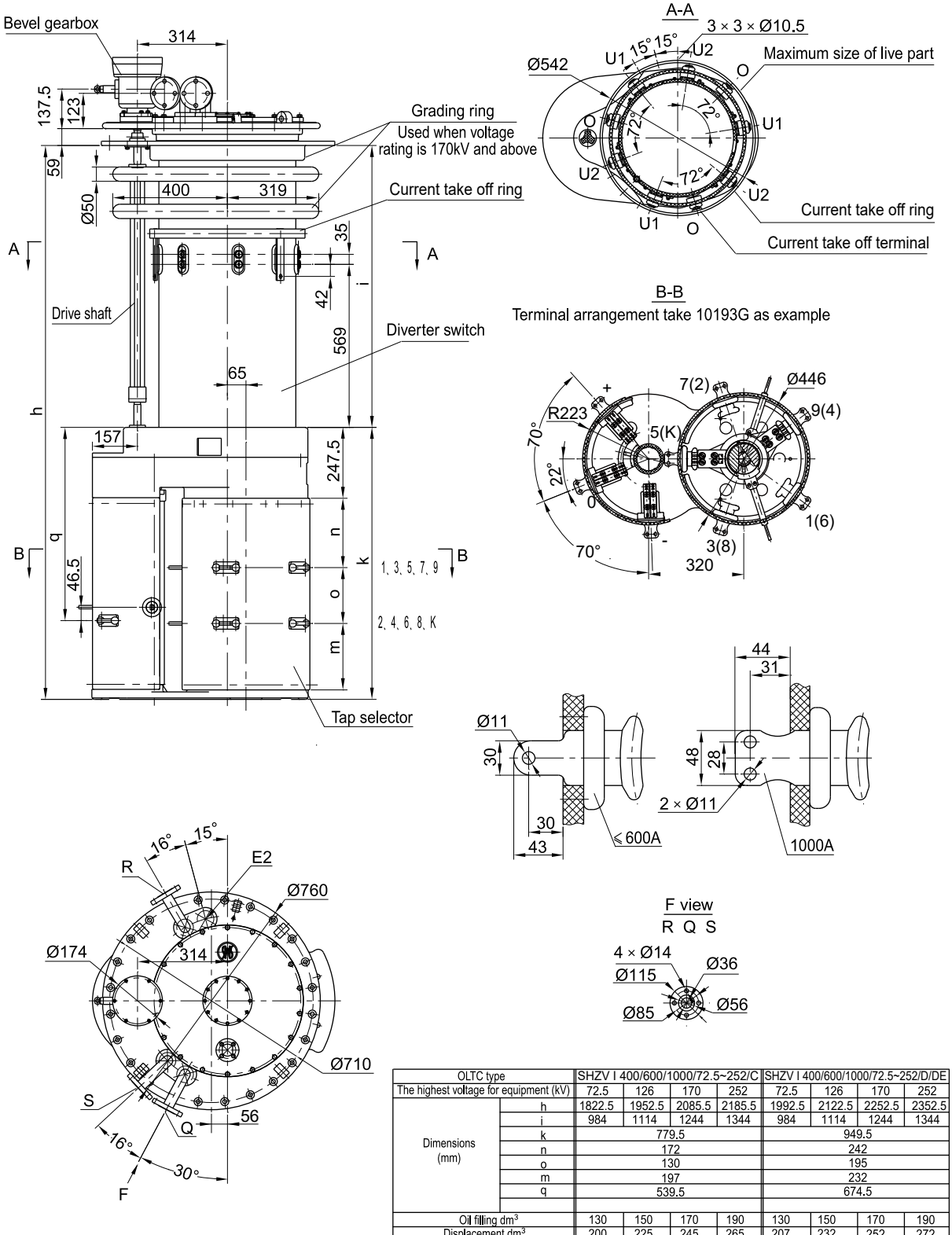

OLTC type		SHZV I 400/600/1000/72.5~252/C				SHZV I 400/600/1000/72.5~252/D/DE			
The highest voltage for equipment (kV)		72.5	126	170	252	72.5	126	170	252
Dimensions (mm)	h	1822.5	1952.5	2085.5	2185.5	1992.5	2122.5	2252.5	2352.5
	i	984	1114	1244	1344	984	1114	1244	1344
	k	779.5				949.5			
	n	172				242			
	o	130				195			
	m	197				232			
	q	539.5				674.5			
Oil filling dm^3		130	150	170	190	130	150	170	190
Displacement dm^3		200	225	245	265	207	232	252	272
Weight kg		270				275			

Unit: mm

Appendix 11. SHZV I 1600A overall dimensions without change-over selector, cylinder tap selector

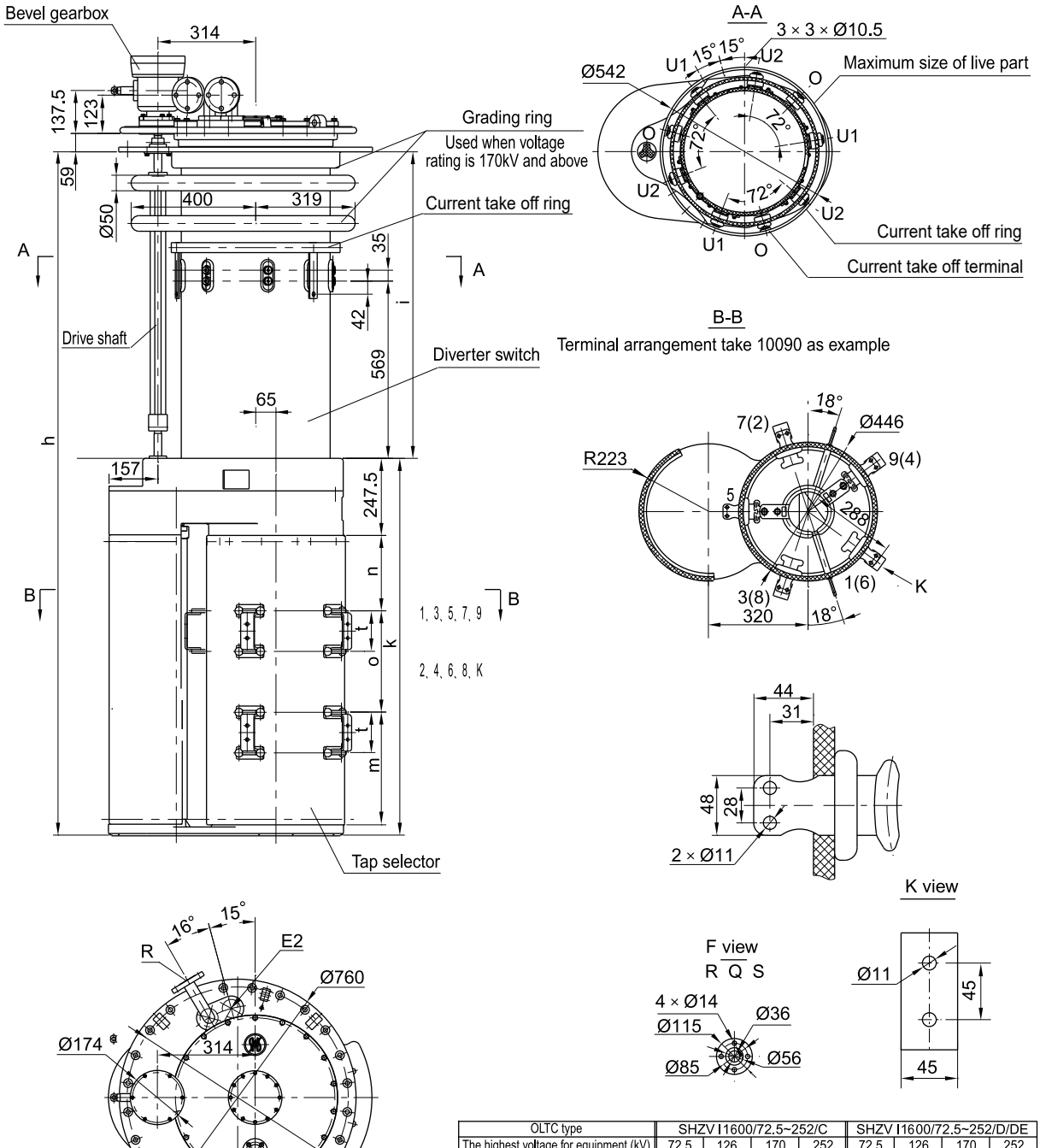

OLTC type		SHZV I1600/72.5~252/C				SHZV I1600/72.5~252/D/DE			
The highest voltage for equipment (kV)		72.5	126	170	252	72.5	126	170	252
Dimensions (mm)	h	2082.5	2212.5	2342.5	2442.5	2252.5	2382.5	2512.5	2612.5
	i	984	1114	1244	1344	984	1114	1244	1344
	k	1039.5				1209.5			
	n	172				237			
	o	260				325			
	t	130				130			
	m	327				362			
Oil filling dm^3		130	150	170	190	130	150	170	190
Displacement dm^3		200	225	245	265	207	232	252	272
Weight kg		275				280			

Unit: mm

Appendix 12. SHZV I 1600A overall dimensions with reversing switch, cylinder tap selector

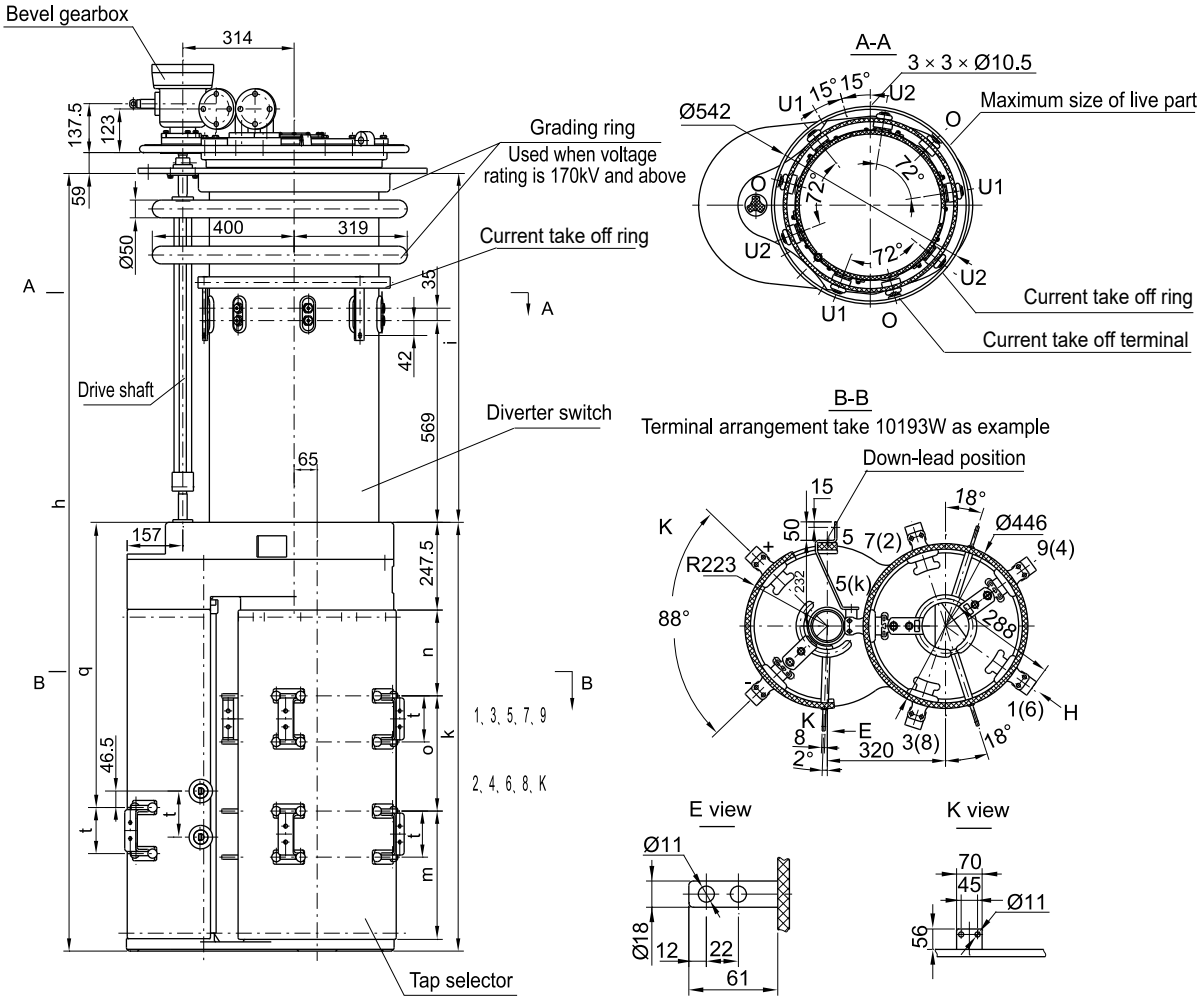

OLTC type		SHZV I1600/72.5~252/C				SHZV I1600/72.5~252/D/DE			
The highest voltage for equipment (kV)		72.5	126	170	252	72.5	126	170	252
Dimensions (mm)	h	2082.5	2212.5	2342.5	2442.5	2252.5	2382.5	2512.5	2612.5
	i	984	1114	1244	1344	984	1114	1244	1344
	k	1039.5				1209.5			
	n	172				237			
	o	260				325			
	t	130				130			
	m	327				362			
	q	669.5				804.5			
Oil filling dm^3		130	150	170	190	130	150	170	190
Displacement dm^3		200	225	245	265	207	232	252	272
Weight kg		280				28			

Unit: mm

Appendix 13. SHZV I 1600A overall dimensions with coarse/fine change-over selector, cylinder tap selector

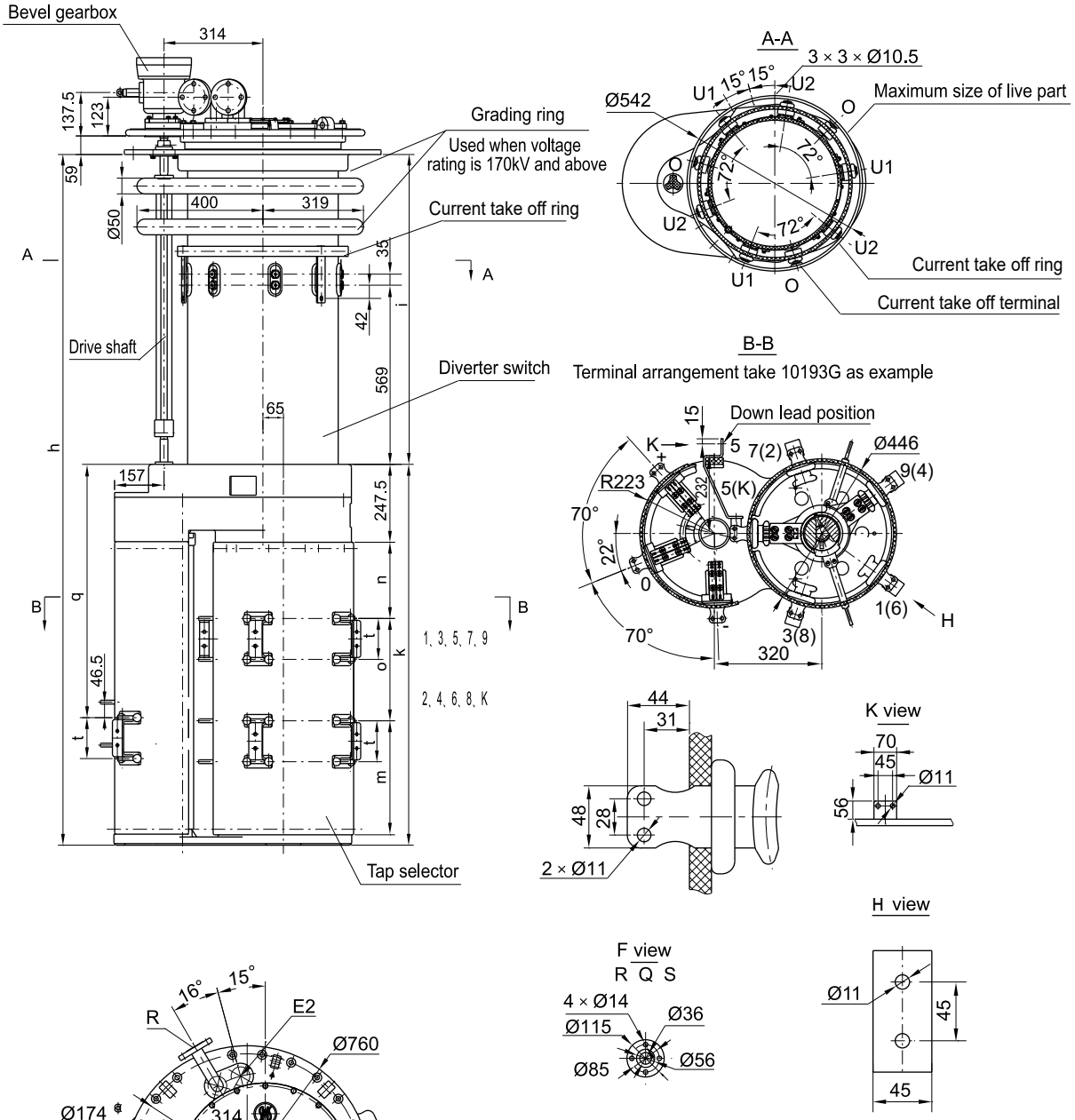

OLTC type		SHZV I1600/72.5~252/C				SHZV I1600/72.5~252/D/DE			
The highest voltage for equipment (kV)		72.5	126	170	252	72.5	126	170	252
Dimensions (mm)	h	2082.5	2212.5	2342.5	2442.5	2252.5	2382.5	2512.5	2612.5
	i	984	1114	1244	1344	984	1114	1244	1344
	k	1039.5				1209.5			
	n	172				237			
	o	260				325			
	t	130				130			
	m	327				362			
	q	669.5				804.5			
Oil filling dm^3		130	150	170	190	130	150	170	190
Displacement dm^3		200	225	245	265	207	232	252	272
Weight kg		280				285			

Unit: mm

Appendix 14. SHZV I 2400A overall dimensions without change-over selector, cylinder tap selector

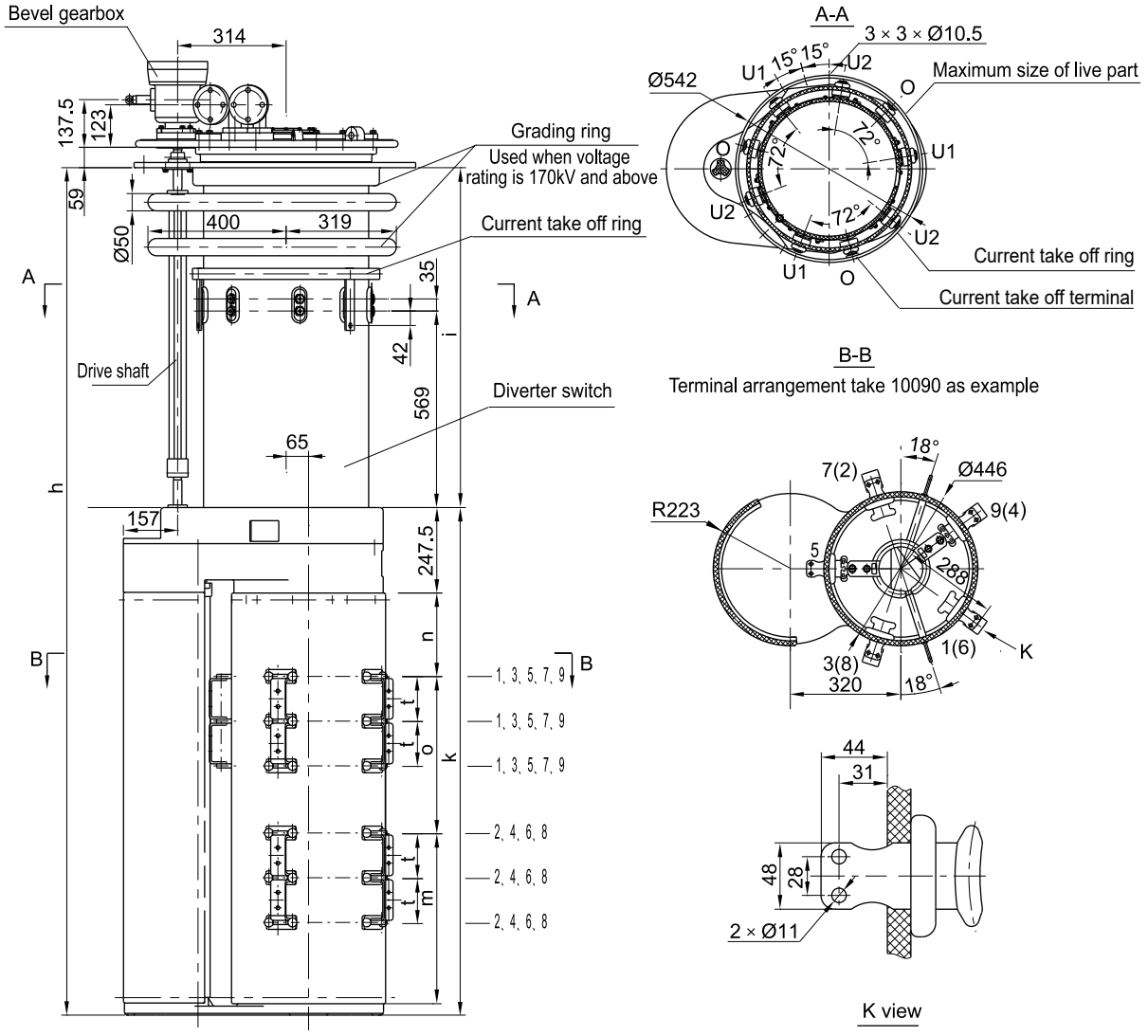

OLTC type		SHZVI2400/72.5~252/C				SHZVI2400/72.5~252/D/DE			
The highest voltage for equipment (kV)		72.5	126	170	252	72.5	126	170	252
Dimensions (mm)	h	2342.5	2472.5	2602.5	2702.5	2512.5	2642.5	2772.5	2872.5
	i	984	1114	1244	1344	984	1114	1244	1344
	k	1299.5				1469.5			
	n	172				242			
	o	390				455			
	t	130				130			
	m	457				492			
Oil filling dm^3		130	150	170	190	130	150	170	190
Displacement dm^3		200	225	245	265	207	232	252	272
Weight kg		275				280			

Unit: mm

Appendix 15. SHZV I 2400A overall dimensions with reversing switch, cylinder tap selector

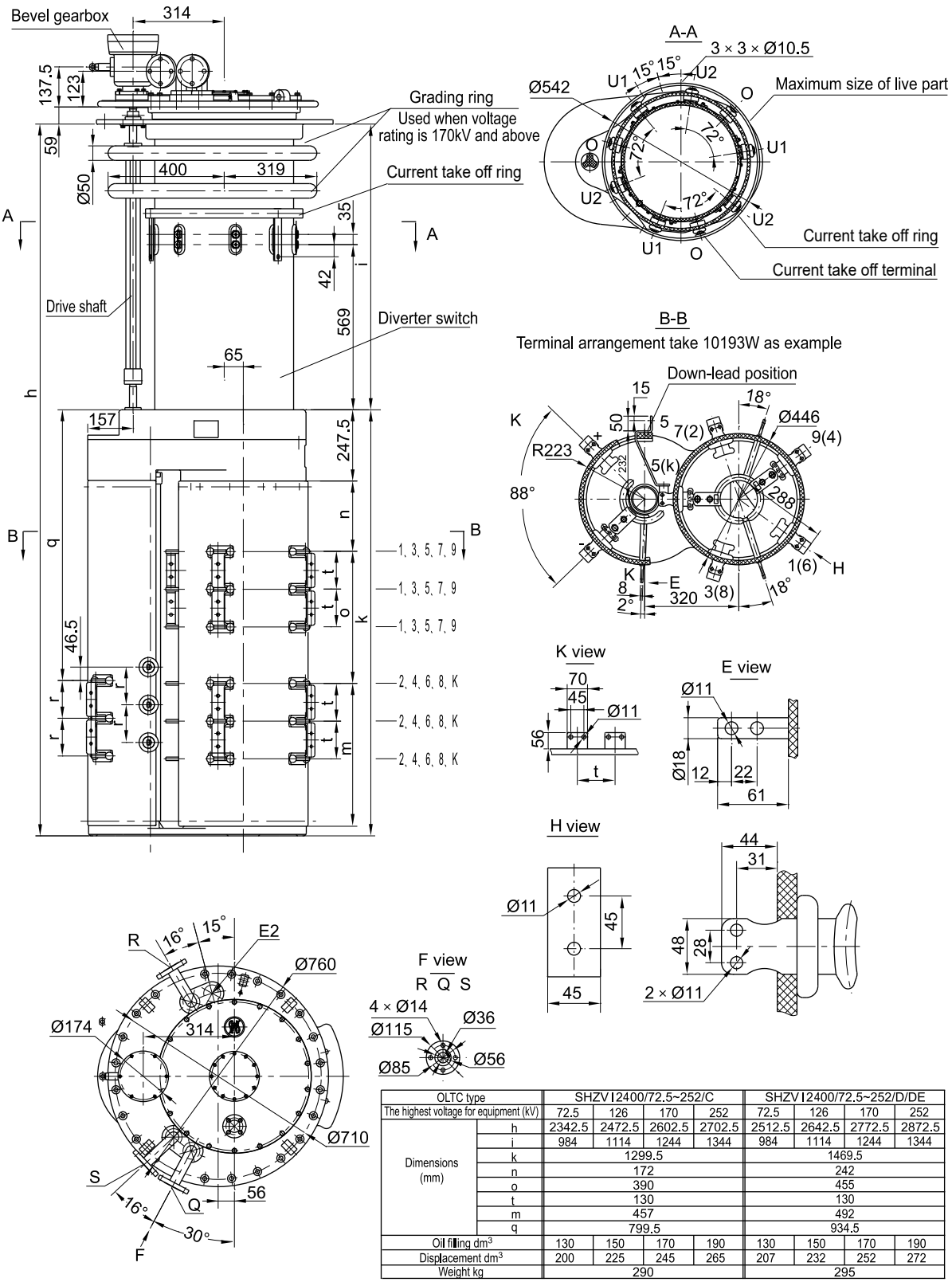

OLTC type		SHZV I 2400/72.5~252/C				SHZV I 2400/72.5~252/D/DE			
The highest voltage for equipment (kV)		72.5	126	170	252	72.5	126	170	252
Dimensions (mm)	h	2342.5	2472.5	2602.5	2702.5	2512.5	2642.5	2772.5	2872.5
	i	984	1114	1244	1344	984	1114	1244	1344
	k	1299.5				1469.5			
	n	172				242			
	o	390				455			
	t	130				130			
	m	457				492			
	q	799.5				934.5			
Oil filling dm^3		130	150	170	190	130	150	170	190
Displacement dm^3		200	225	245	265	207	232	252	272
Weight kg		290				295			

Unit: mm

Appendix 16. SHZV I 2400A overall dimensions with coarse/fine change-over selector, cylinder tap selector

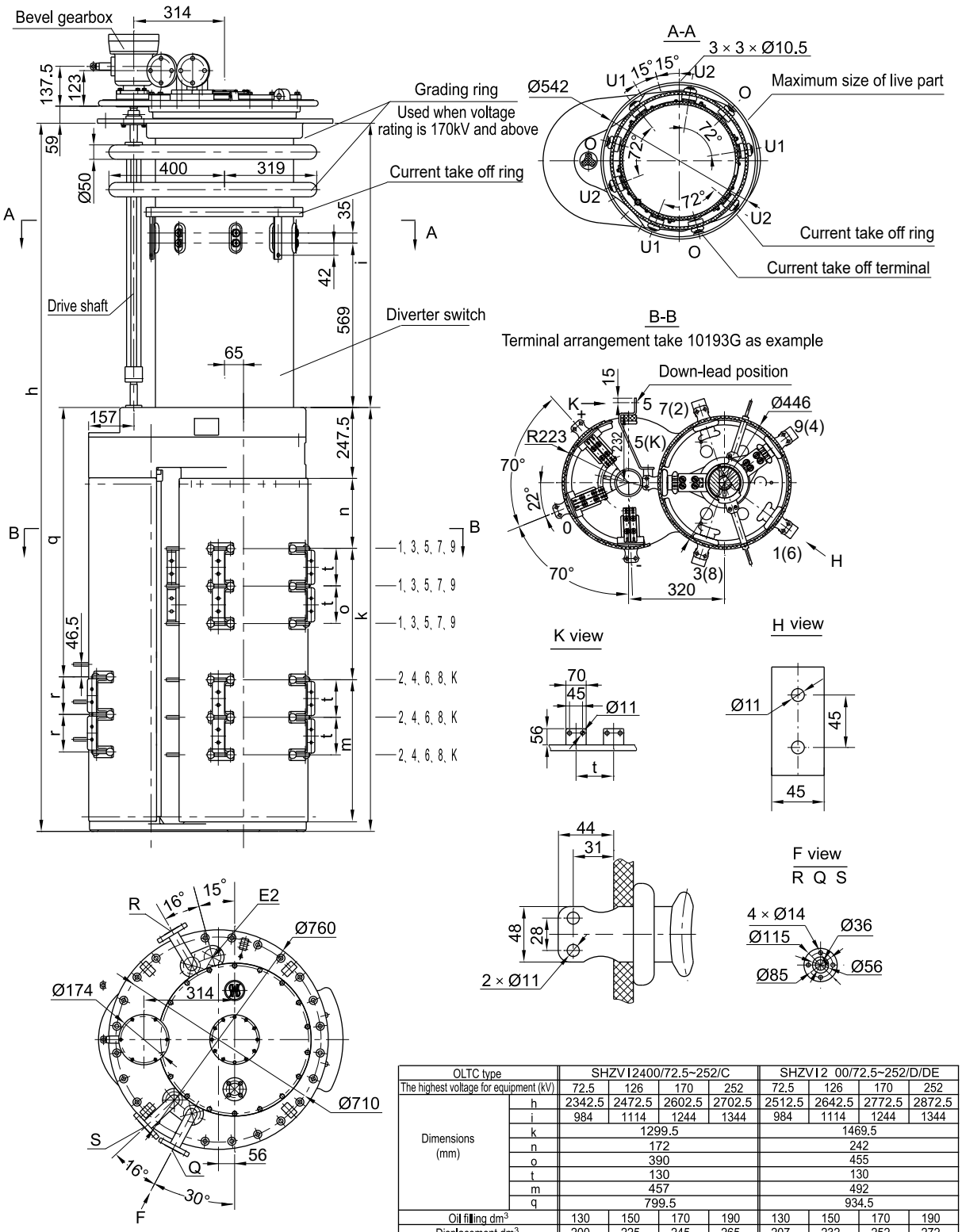

OLTC type		SHZVI2400/72.5~252/C				SHZVI2 00/72.5~252/D/DE			
The highest voltage for equipment (kV)		72.5	126	170	252	72.5	126	170	252
Dimensions (mm)	h	2342.5	2472.5	2602.5	2702.5	2512.5	2642.5	2772.5	2872.5
	i	984	1114	1244	1344	984	1114	1244	1344
	k	1299.5				1469.5			
	n	172				242			
	o	390				455			
	t	130				130			
	m	457				492			
	q	799.5				934.5			
Oil filling dm^3		130	150	170	190	130	150	170	190
Displacement dm^3		200	225	245	265	207	232	252	272
Weight kg		290				295			

Unit: mm

Appendix 17. SHZV I 3000A overall dimensions without change-over selector, cylinder type

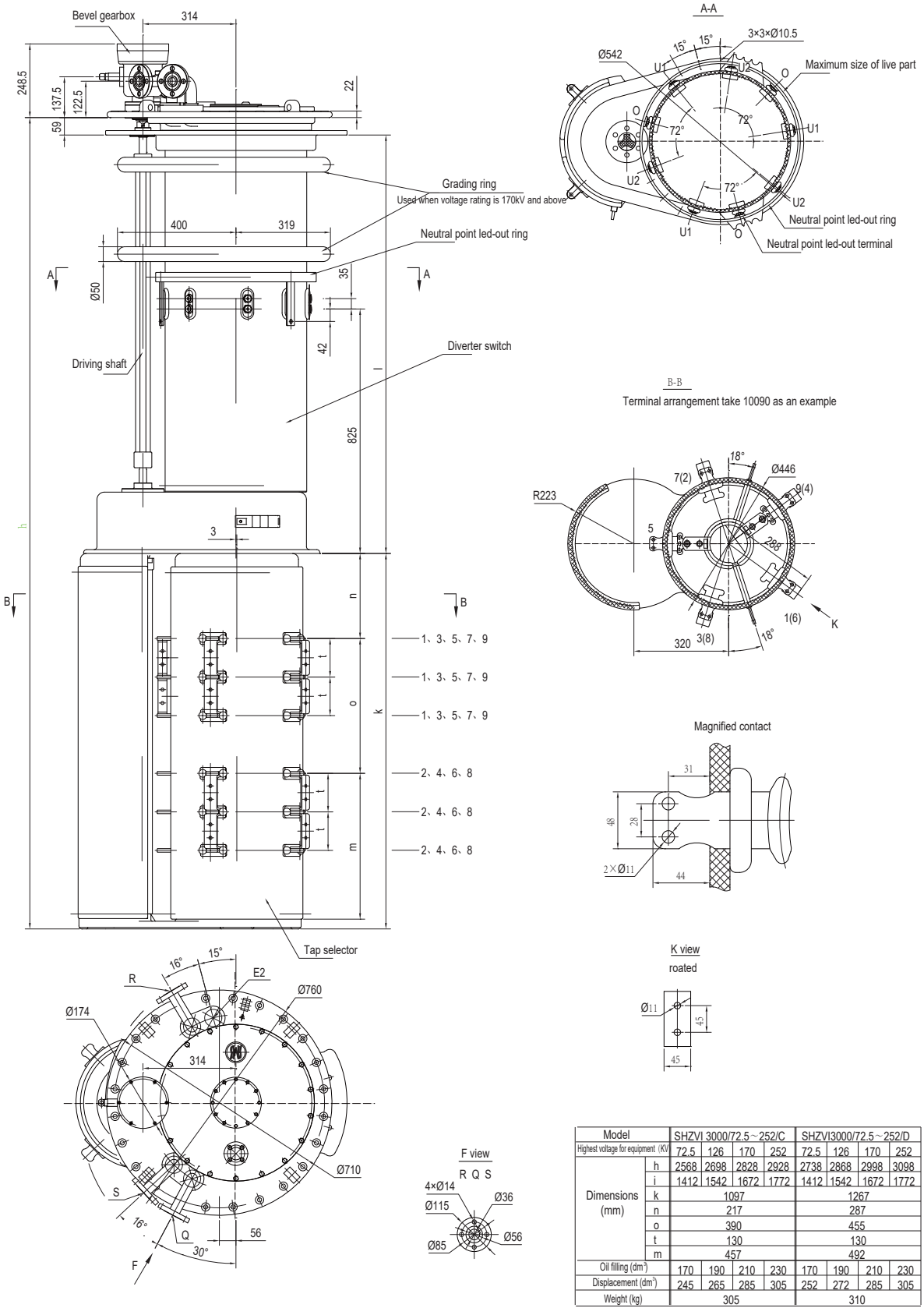

Model		SHZVI 3000/72.5～252/C				SHZVI3000/72.5～252/D			
Highest voltage for equipment (KV)		72.5	126	170	252	72.5	126	170	252
Dimensions (mm)	h	2568	2698	2828	2928	2738	2868	2998	3098
	i	1412	1542	1672	1772	1412	1542	1672	1772
	k	1097				1267			
	n	217				287			
	o	390				455			
	t	130				130			
	m	457				492			
Oil filling (dm^3)		170	190	210	230	170	190	210	230
Displacement (dm^3)		245	265	285	305	252	272	285	305
Weight (kg)		305				310			

Unit: mm

Appendix 18. SHZV 1300A overall dimensions with reversing change-over selector, cylinder type

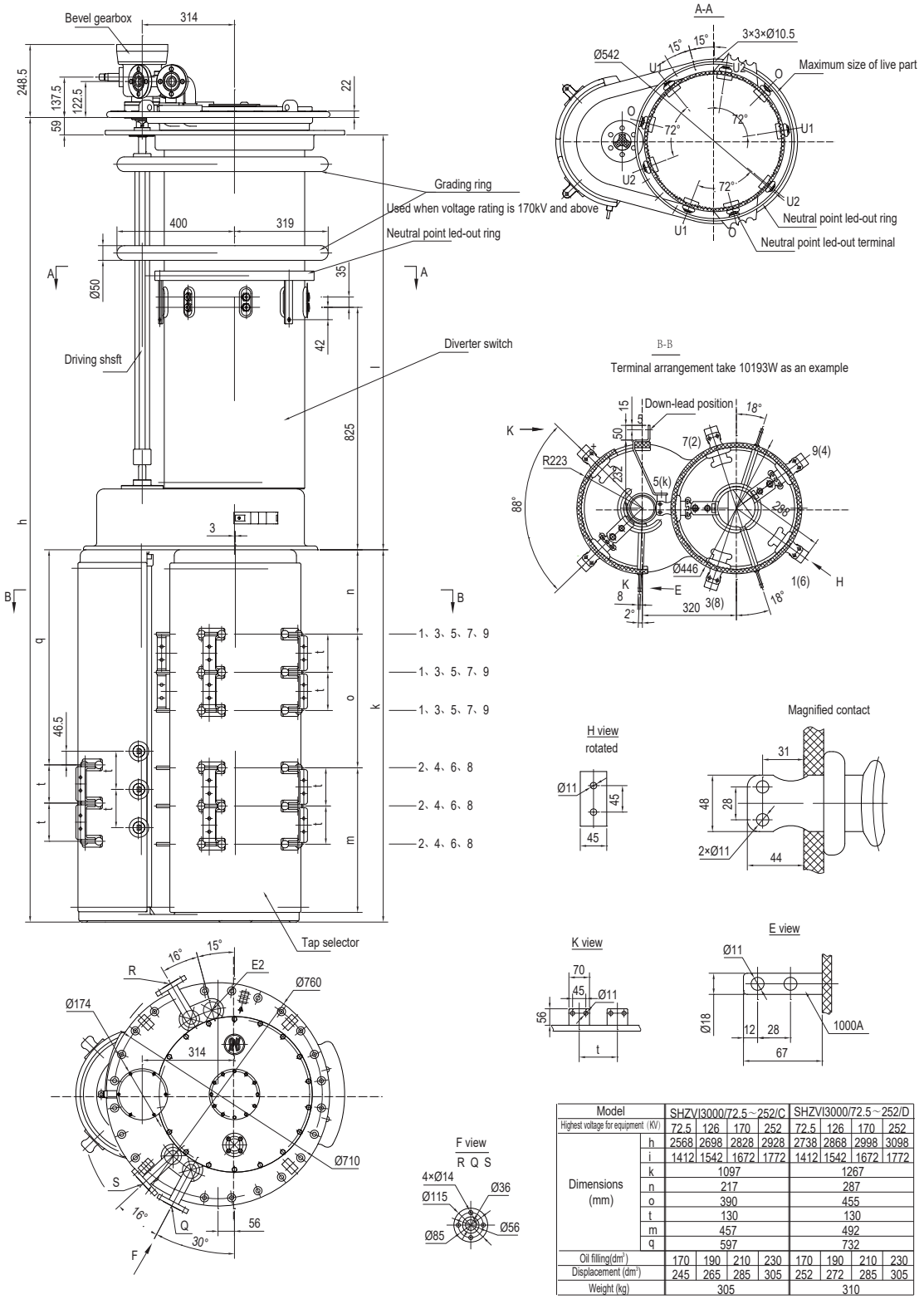

Model		SHZVI3000/72.5～252/C				SHZVI3000/72.5～252/D			
Highest voltage for equipment (KV)		72.5	126	170	252	72.5	126	170	252
Dimensions (mm)	h	2568	2698	2828	2928	2738	2868	2998	3098
	i	1412	1542	1672	1772	1412	1542	1672	1772
	k	1097				1267			
	n	217				287			
	o	390				455			
	t	130				130			
	m	457				492			
	q	597				732			
Oil filling(dm³)		170	190	210	230	170	190	210	230
Displacement (dm³)		245	265	285	305	252	272	285	305
Weight (kg)		305				310			

Unit: mm

Appendix 19. SHZV 3000A overall dimensions with coarse & fine change-over selector, cylinder type

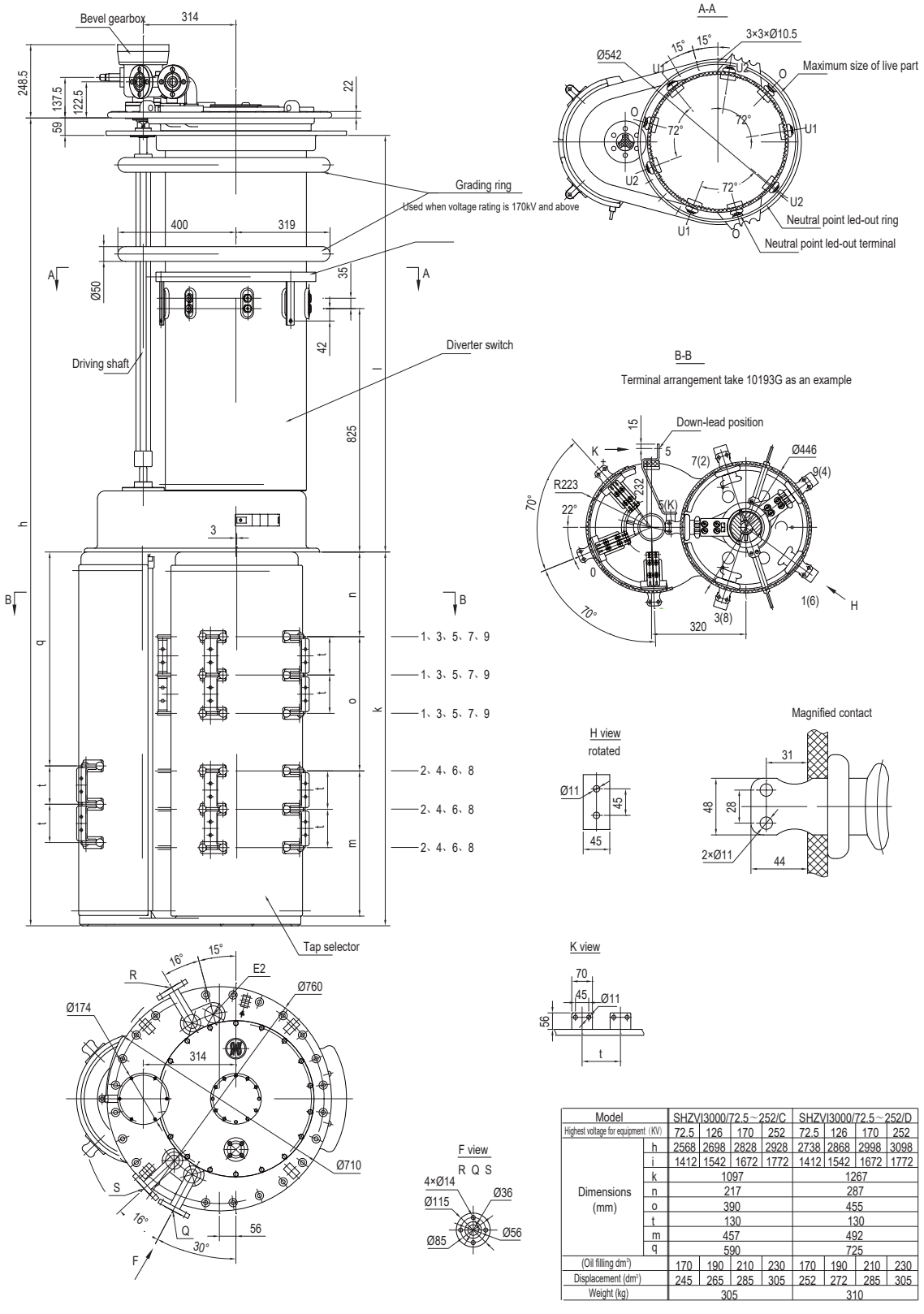

Model		SHZVI3000/72.5～252/C				SHZVI3000/72.5～252/D			
Highest voltage for equipment (KV)		72.5	126	170	252	72.5	126	170	252
Dimensions (mm)	h	2568	2698	2828	2928	2738	2868	2998	3098
	i	1412	1542	1672	1772	1412	1542	1672	1772
	k	1097				1267			
	n	217				287			
	o	390				455			
	t	130				130			
	m	457				492			
	q	590				725			
(Oil filling dm^3)		170	190	210	230	170	190	210	230
Displacement (dm^3)		245	265	285	305	252	272	285	305
Weight (kg)		305				310			

Unit: mm

Appendix 20. SHZV I 400/600A overall dimensions with reversing switch, cage tap selector

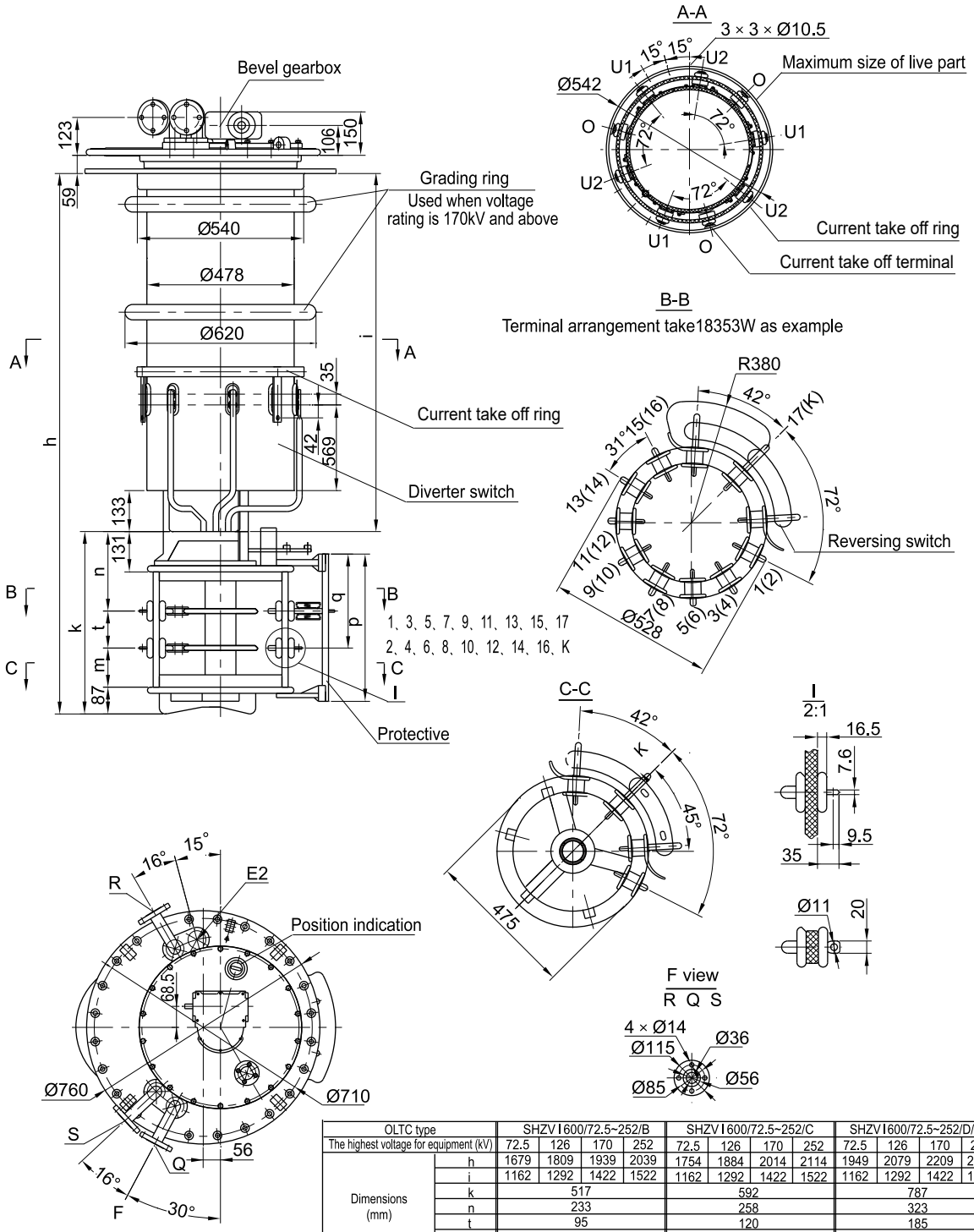

OLTC type		SHZV I 600/72.5~252/B				SHZV I 600/72.5~252/C				SHZV I 600/72.5~252/D/DE			
The highest voltage for equipment (kV)		72.5	126	170	252	72.5	126	170	252	72.5	126	170	252
Dimensions (mm)	h	1679	1809	1939	2039	1754	1884	2014	2114	1949	2079	2209	2309
	i	1162	1292	1422	1522	1162	1292	1422	1522	1162	1292	1422	1522
	k	517				592				787			
	n	233				258				323			
	t	95				120				185			
	m	102				127				192			
	q	160				185				250			
	p	403				478				673			
Oil filling dm^3		130	150	170	190	130	150	170	190	130	150	170	190
Displacement dm^3		199	224	244	264	200	225	245	265	207	232	252	272
Weight kg		265				270				275			

Unit: mm

Appendix 21. SHZV I 1200A overall dimensions with reversing switch, cage tap selector

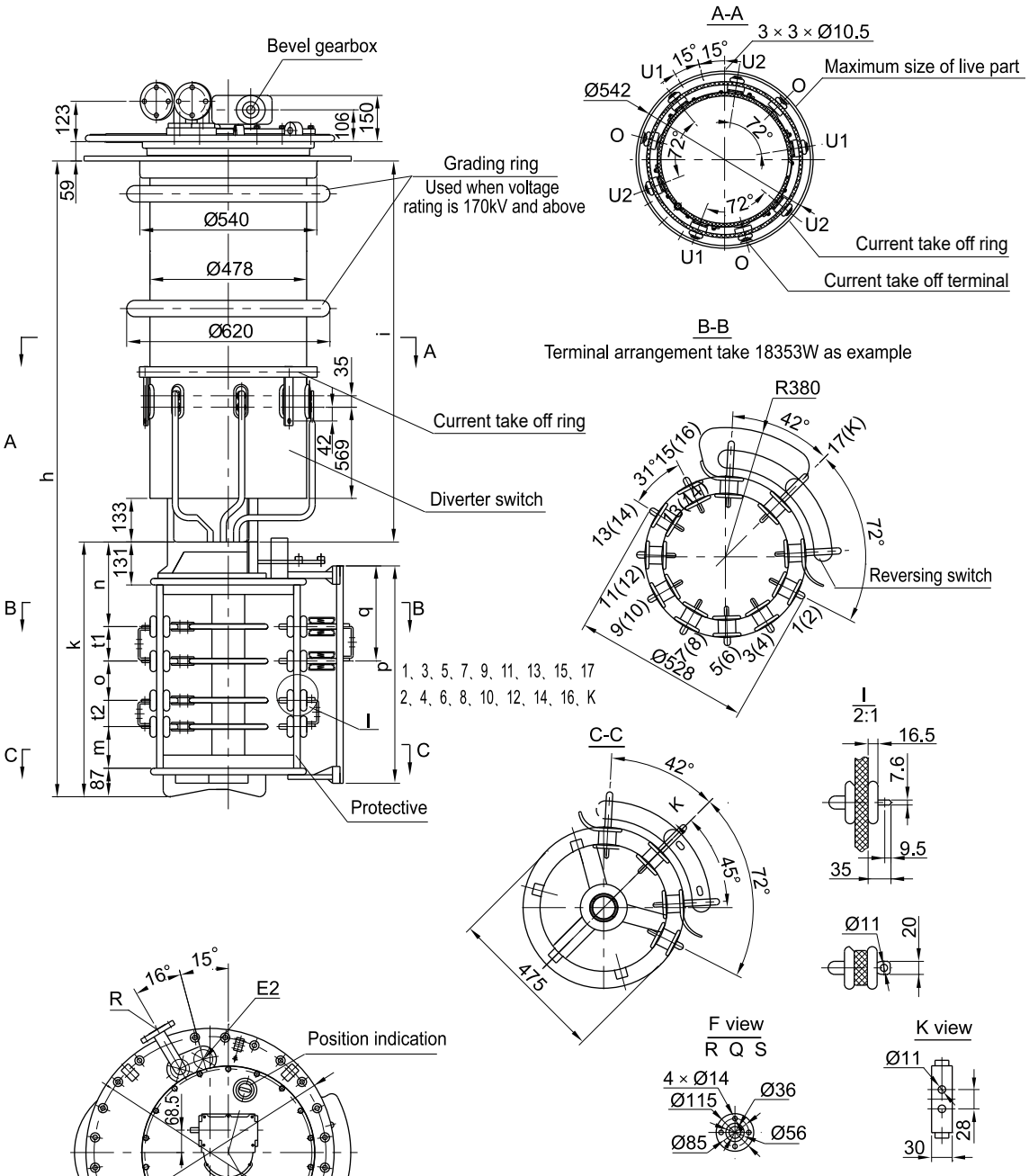

OLTC type		SHZVI 1200/72.5~252/B				SHZVI 1200/72.5~252/C				SHZVI 1200/72.5~252/D/DE			
The highest voltage for equipment (kV)		72.5	126	170	252	72.5	126	170	252	72.5	126	170	252
Dimensions (mm)	h	1679	1809	1939	2039	1754	1884	2014	2114	1949	2079	2209	2309
	i	1162	1292	1422	1522	1162	1292	1422	1522	1162	1292	1422	1522
	k	702				777				972			
	n	233				258				323			
	o	95				120				185			
	t1	105				105				105			
	t2	80				80				80			
	m	102				127				192			
	q	160				185				250			
	p	588				663				858			
Oil filling dm^3		130	150	170	190	130	150	170	190	130	150	170	190
Displacement dm^3		199	224	244	264	200	225	245	265	207	232	252	272
Weight kg		275				280				295			

Unit: mm

Appendix 22. SHZV I 1500A overall dimensions with reversing switch, cage tap selector

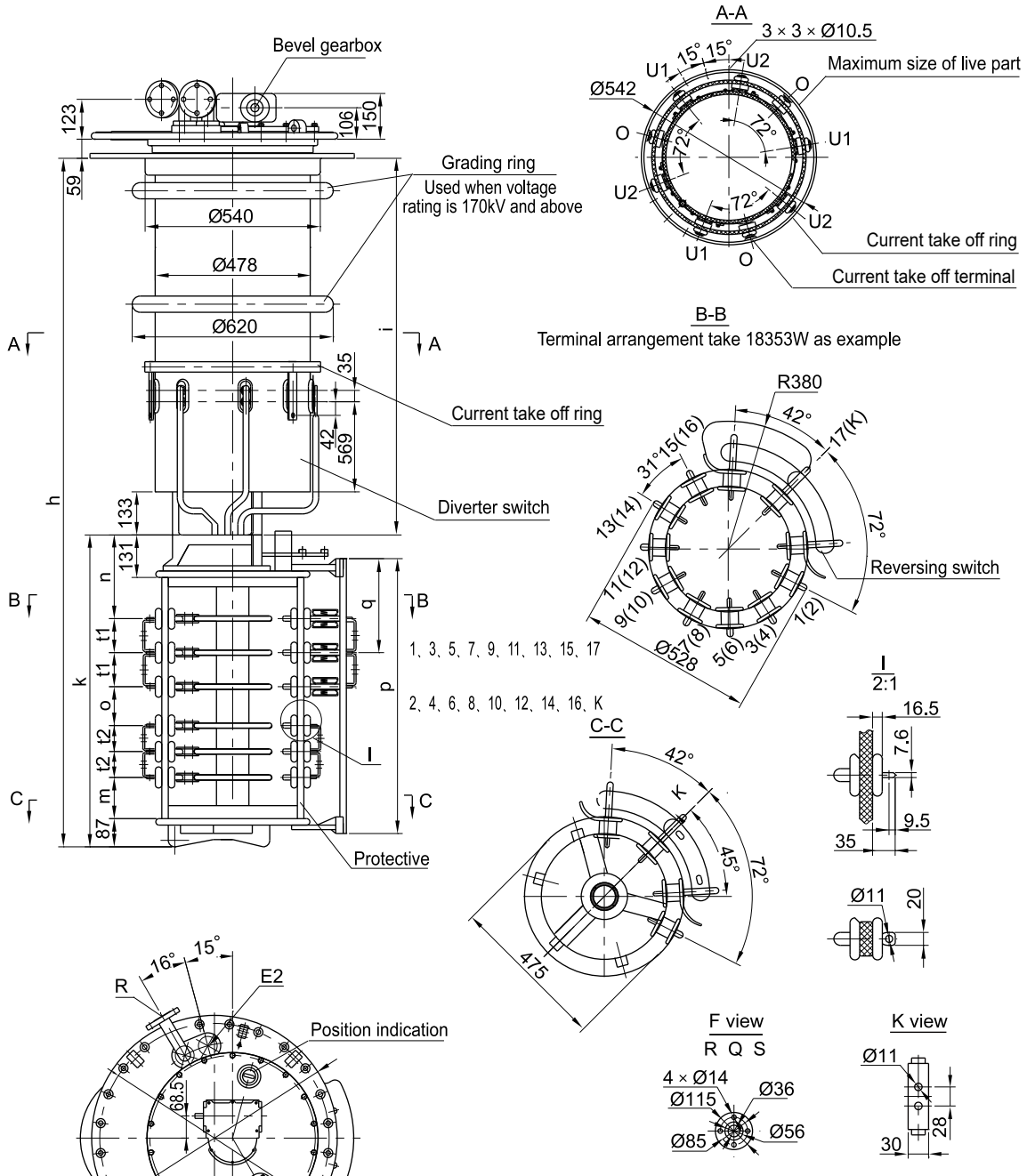

OLTC type		SHZVI 1500/72.5~252/B				SHZVI 1500/72.5~252/C				SHZVI 1500/72.5~252/D/DE			
The highest voltage for equipment (kV)		72.5	126	170	252	72.5	126	170	252	72.5	126	170	252
Dimensions (mm)	h	2049	2179	2309	2409	2124	2254	2384	2484	2319	2449	2579	2679
	i	1162	1292	1422	1522	1162	1292	1422	1522	1162	1292	1422	1522
	k	887				962				1157			
	n	233				258				323			
	o	95				120				185			
	t1	105				105				105			
	t2	80				80				80			
	m	102				127				192			
	q	160				185				250			
	p	773				848				1043			
Oil filling dm^3		130	150	170	190	130	150	170	190	130	150	170	190
Displacement dm^3		199	224	244	264	200	225	245	265	207	232	252	272
Weight kg		280				285				290			

Unit: mm

Appendix 23. SHZV III 400/600/1000A (ZnO protection) overall dimensions without change-over selector, cylinder tap selector

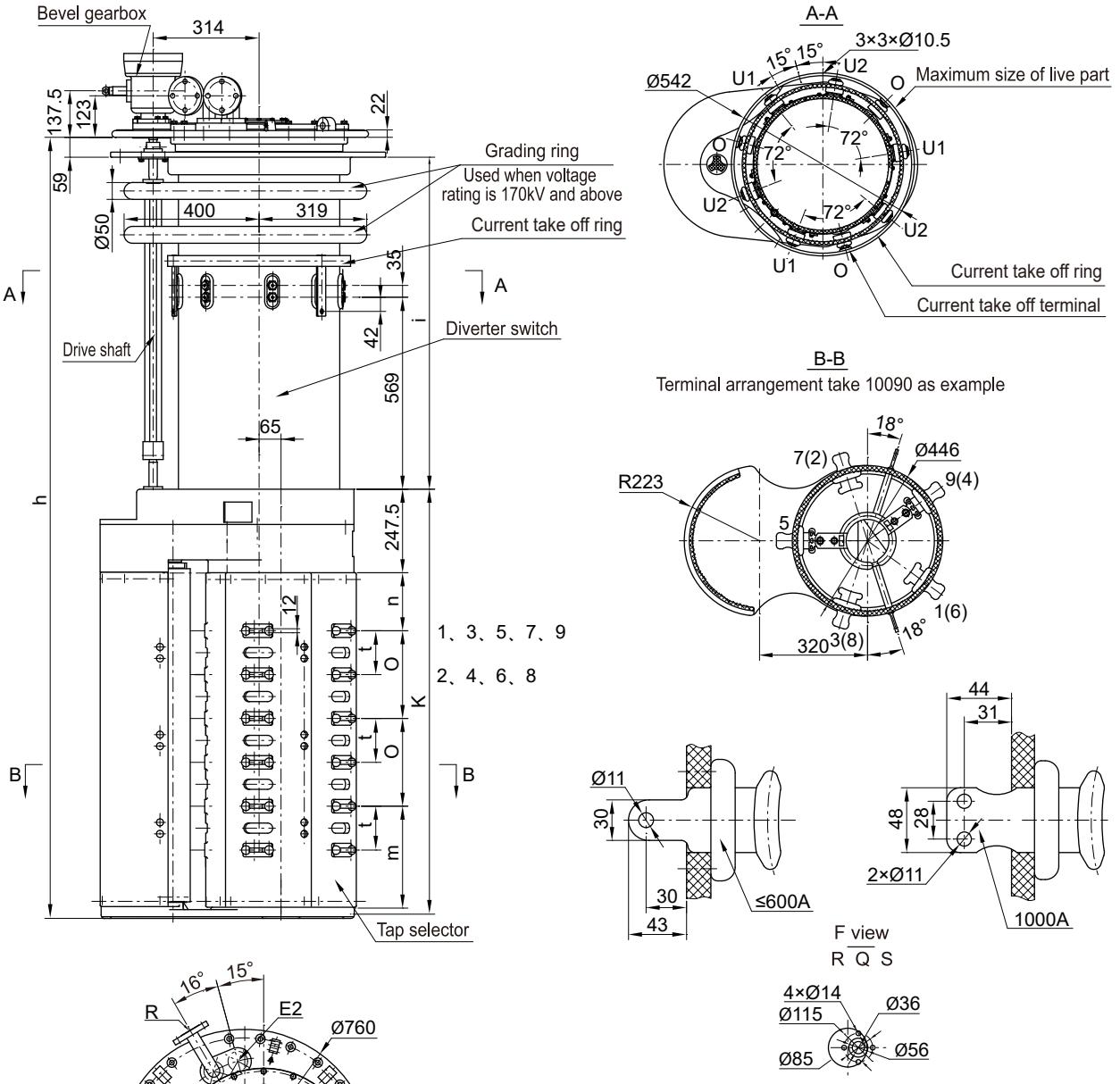

OLTC type		SHZV III 400/600/1000/72.5～252/B				SHZV III 400/600/1000/72.5～252/C				SHZV III 400/600/1000/72.5～252/D/DE			
The highest voltage for equipment (kV)		72.5	126	170	252	72.5	126	170	252	72.5	126	170	252
Dimensions (mm)	h	2237.5	2367.5	2497.5	2597.5	2412.5	2542.5	2672.5	2772.5	2882.5	3012.5	3142.5	3242.5
	i	1094	1224	1354	1454	1094	1224	1354	1454	1094	1224	1354	1454
	k	1084.5				1259.5				1729.5			
	n	147				172				237			
	o	210				260				390			
	t	105				130				195			
	m	252				302				432			
Oil filling dm^3		135	155	175	195	135	155	175	195	135	155	175	195
Displacement dm^3		204	229	249	269	205	230	250	270	215	235	257	277
Weight kg		275				280				285			

E2: Bleeding of transformer tank R: Connecting flange for protective relay
S: Connecting flange for suction pipe Q: Connecting flange for oil return

Unit: mm

Note: All connection pipe and upper gearbox can be turned in 360°

Appendix 24. SHZV III 400/600/1000A (ZnO protection) overall dimensions with reversing switch, cylinder tap selector

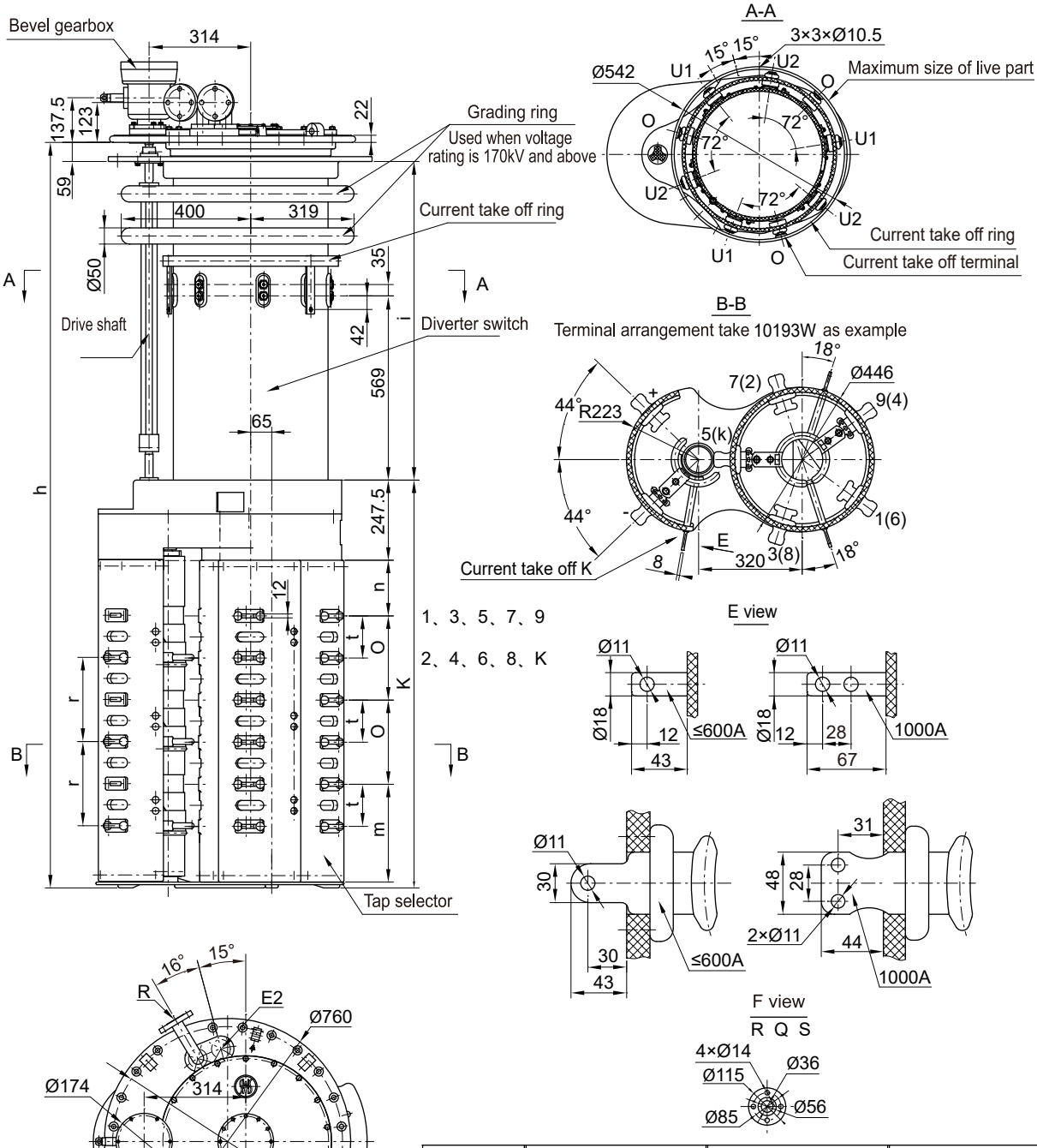

E2: Bleeding of transformer tank
R: Connecting flange for protective relay
S: Connecting flange for suction pipe
Q: Connecting flange for oil return

OLTC type		SHZV III 400/600//1000/72.5～252/B				SHZV III 400/600/1000/72.5～252/C				SHZV III 400/600/1000/72.5～252/D/DE			
The highest voltage for equipment (kV)		72.5	126	170	252	72.5	126	170	252	72.5	126	170	252
Dimensions (mm)	h	2237.5	2367.5	2497.5	2597.5	2412.5	2542.5	2672.5	2772.5	2882.5	3012.5	3142.5	3242.5
	i	1094	1224	1354	1454	1094	1224	1354	1454	1094	1224	1354	1454
	k	1084.5				1259.5				1729.5			
	n	147				172				237			
	o	210				260				390			
	t	105				130				195			
	m	252				302				432			
	r	210				260				390			
Oil filling dm^3		135	155	175	195	135	155	175	195	135	155	175	195
Displacement dm^3		204	229	249	269	205	230	250	270	215	235	257	277
Weight kg		285				295				300			

Note: All connection pipe and upper gearbox can be turned in 360°

Unit: mm

Appendix 25. SHZV III 400/600/1000A (ZnO protection) overall dimensions with coarse/fine change-over selector,cylinder tap selector

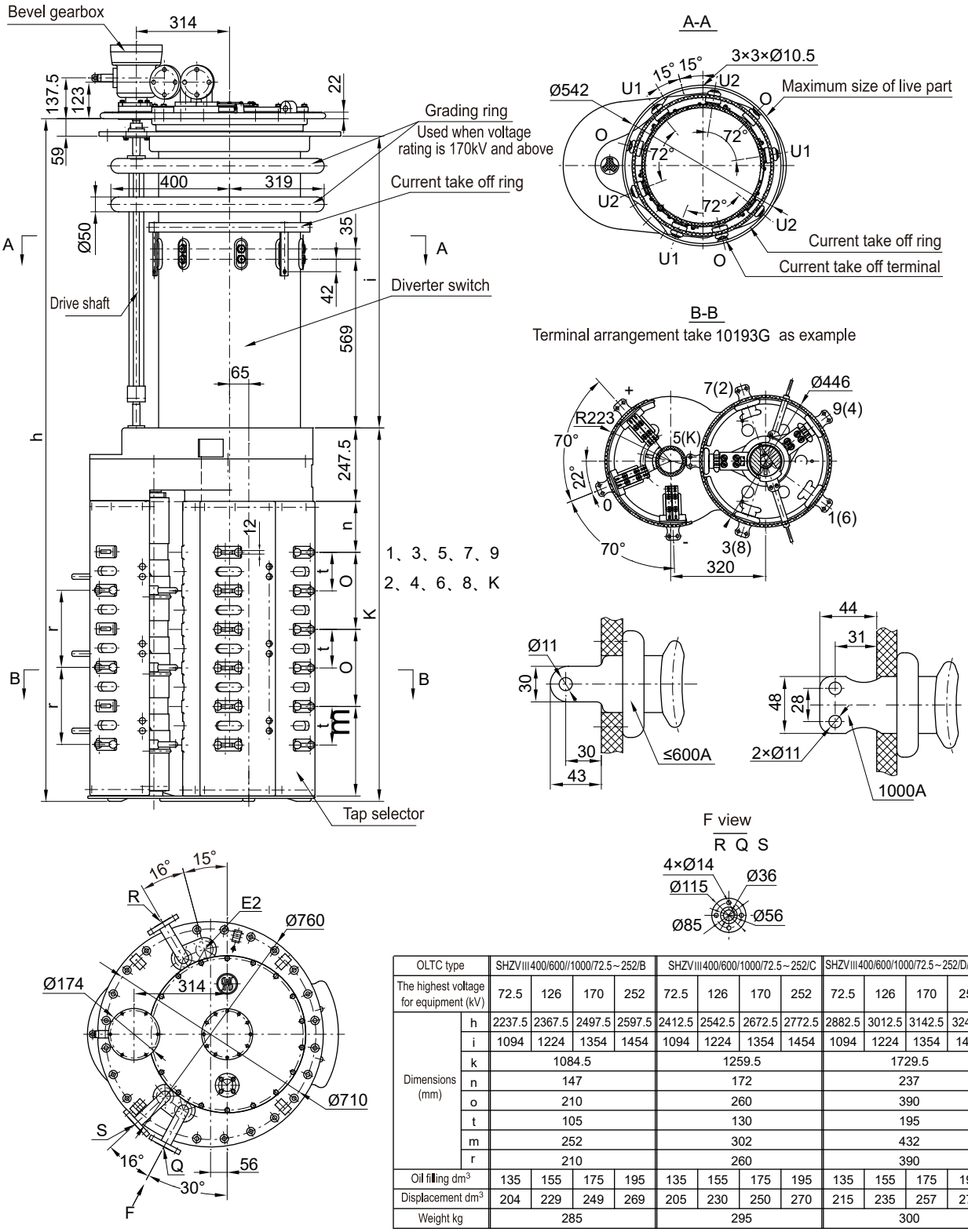

OLTC type		SHZV III 400/600//1000/72.5~252/B				SHZV III 400/600/1000/72.5~252/C				SHZV III 400/600/1000/72.5~252/D/DE			
The highest voltage for equipment (kV)		72.5	126	170	252	72.5	126	170	252	72.5	126	170	252
Dimensions (mm)	h	2237.5	2367.5	2497.5	2597.5	2412.5	2542.5	2672.5	2772.5	2882.5	3012.5	3142.5	3242.5
	i	1094	1224	1354	1454	1094	1224	1354	1454	1094	1224	1354	1454
	k	1084.5				1259.5				1729.5			
	n	147				172				237			
	o	210				260				390			
	t	105				130				195			
	m	252				302				432			
	r	210				260				390			
Oil filling dm^3		135	155	175	195	135	155	175	195	135	155	175	195
Displacement dm^3		204	229	249	269	205	230	250	270	215	235	257	277
Weight kg		285				295				300			

E2: Bleeding of transformer tank R: Connecting flange for protective relay
S: Connecting flange for suction pipe Q: Connecting flange for oil return

Unit: mm

Note: All connection pipe and upper gearbox can be turned in 360°

Appendix 26. SHZV III 400/600 (ZnO protection) overall dimensions, with reversing switch, cage tap selector

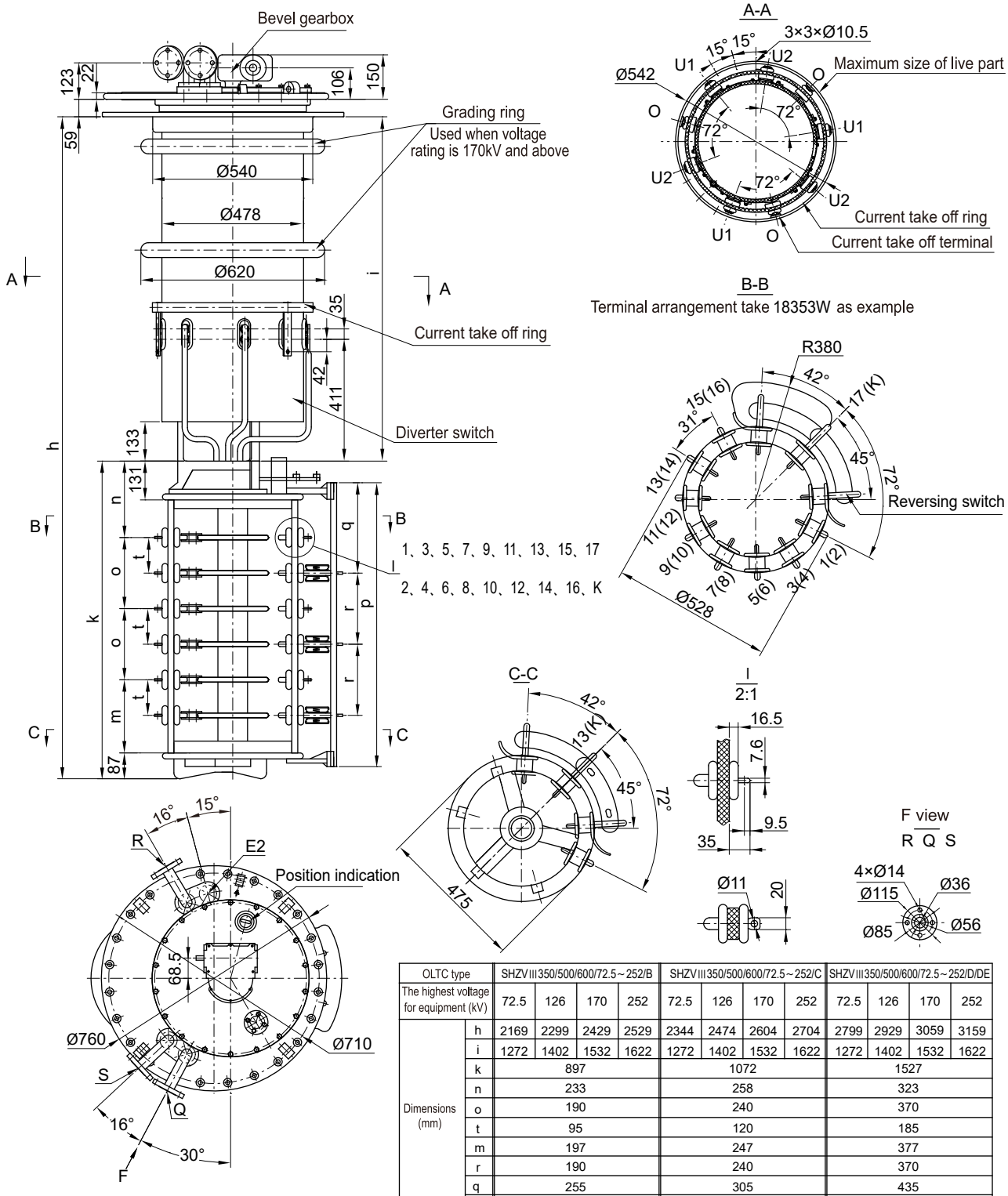

OLTC type		SHZV III 350/500/600/72.5～252/B				SHZV III 350/500/600/72.5～252/C				SHZV III 350/500/600/72.5～252/D/DE			
The highest voltage for equipment (kV)		72.5	126	170	252	72.5	126	170	252	72.5	126	170	252
Dimensions (mm)	h	2169	2299	2429	2529	2344	2474	2604	2704	2799	2929	3059	3159
	i	1272	1402	1532	1622	1272	1402	1532	1622	1272	1402	1532	1622
	k	897				1072				1527			
	n	233				258				323			
	o	190				240				370			
	t	95				120				185			
	m	197				247				377			
	r	190				240				370			
	q	255				305				435			
	p	783				958				1413			
Oil filling dm^3		135	155	175	195	135	155	175	195	135	155	175	195
Displacement dm^3		204	229	249	269	205	230	250	270	212	237	257	277
Weight kg		285				290				295			

E2: Bleeding of transformer tank
R: Connecting flange for protective relay
S: Connecting flange for suction pipe
Q: Connecting flange for oil return

Note: All connection pipe and upper gearbox can be turned in 360°

Unit: mm

Appendix 27. SHZV I 1000A (ZnO protection) overall dimensions without change-over selector, cylinder type

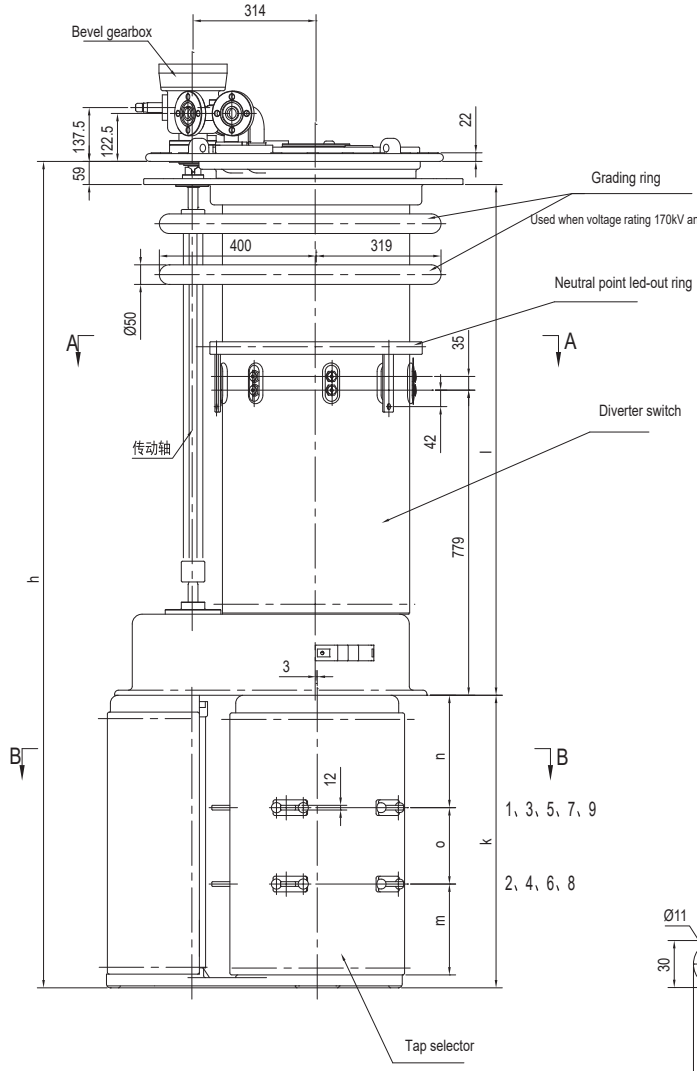

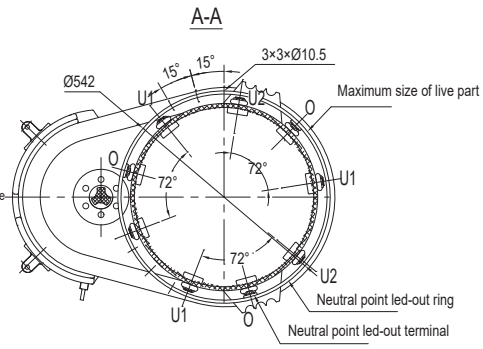

B-B

Terminal arrangement take 10090 as an example

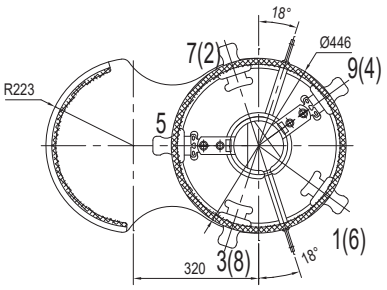

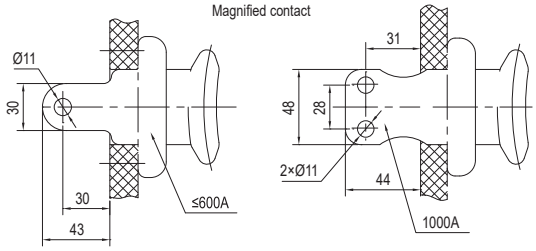

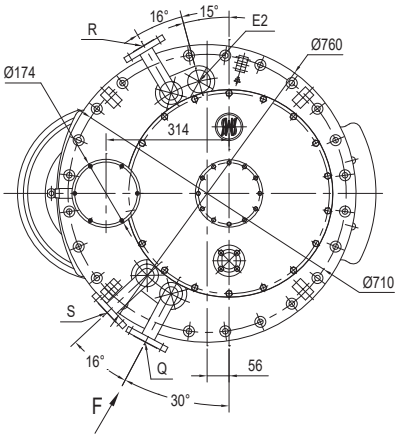

F view

R Q S

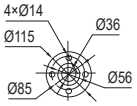

E2: Bleeding of transformer tank
R: Connecting flange for protective relay
S: Connecting flange for suction pipe
Q: Connecting flange for oil return
Note: All connection pipes and upper gearbox can e turned in 360 degrees.

Model		SHZV I 400/600/1000/72.5~252/C				SHZV I 400/600/1000/72.5~252/D			
Highest voltage for equipment (KV)		72.5	126	170	252	72.5	126	170	252
Dimensions (mm)	h	1940	2070	2200	2300	2110	2240	2370	2470
	i	1304	1434	1584	1684	1304	1434	1584	1684
	k	577				747			
	n	217				287			
	o	130				195			
	m	197				232			
Oil filling (dm^3)		130	150	170	190	130	150	170	190
Displacement (dm^3)		200	225	245	265	207	232	252	272
Weight (kg)		270				275			

Unit: mm

Appendix 28. SHZV I 1000A (ZnO protection) overall dimensions with reversing switch, cylinder type

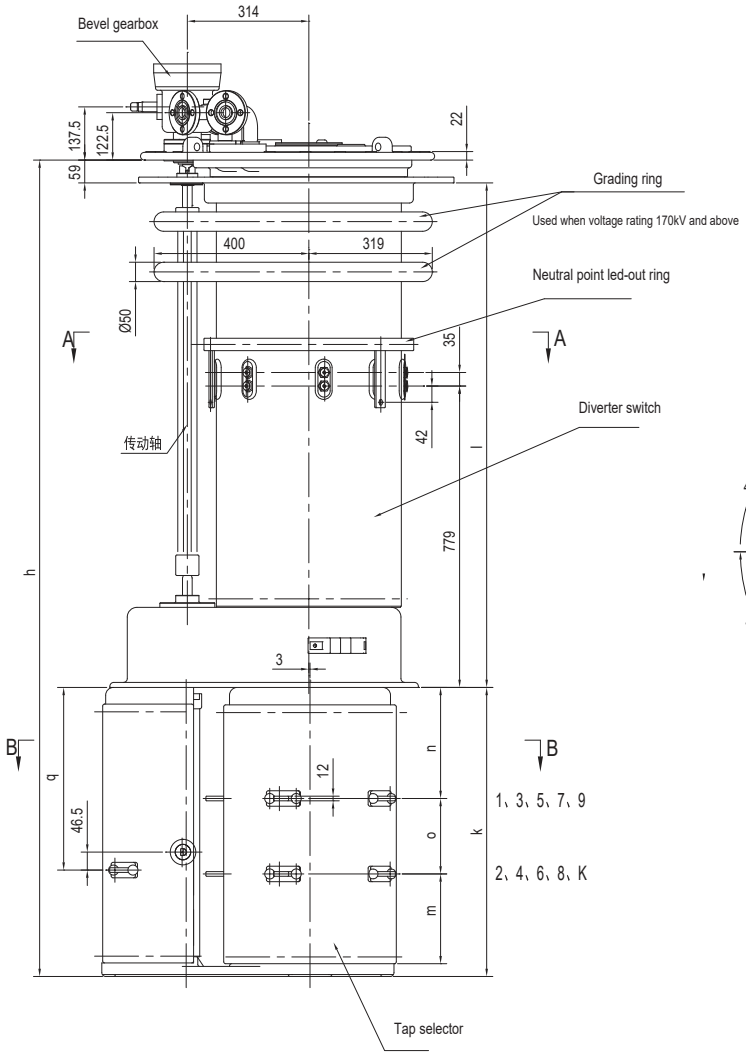

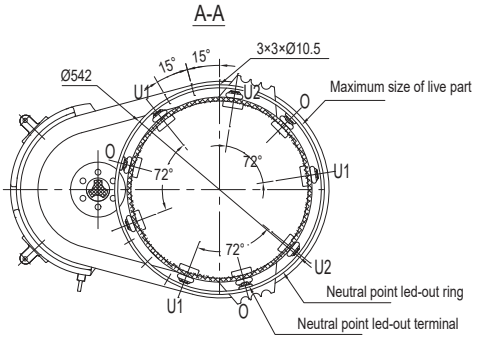

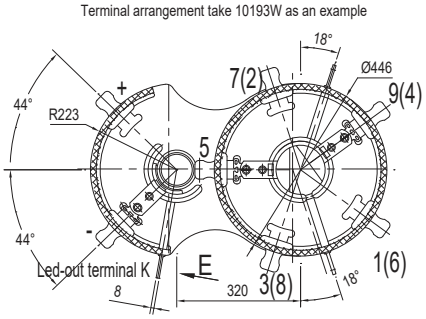

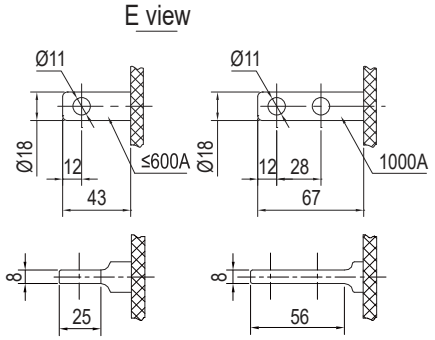

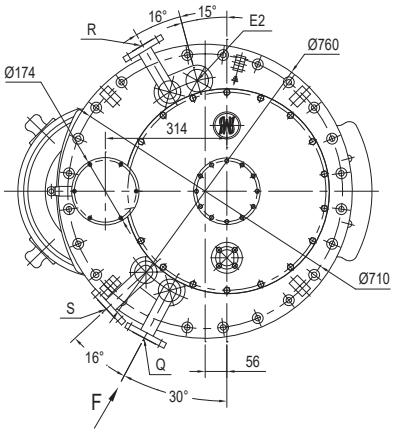

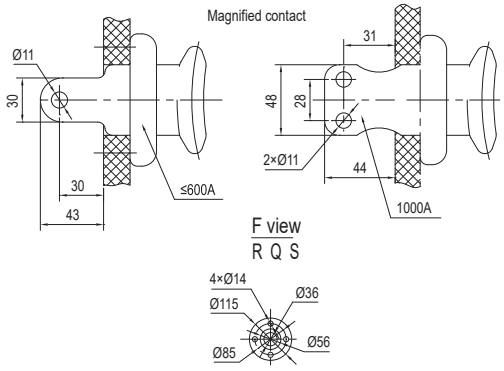

E2: Bleeding of transformer tank
R: Connecting flange for protective relay
S: Connecting flange for suction pipe
Q: Connecting flange for oil return
Note: All connection pipes and upper gearbox can e turned in 360 degrees.

Model		SHZV I 400/600/1000/72.5~252/C				SHZV I 400/600/1000/72.5~252/D			
Highest voltage for equipment (kV)		72.5	126	170	252	72.5	126	170	252
Dimensions (mm)	h	1940	2070	2200	2300	2110	2240	2370	2470
	i	1304	1434	1584	1684	1304	1434	1584	1684
	k	577				747			
	n	217				287			
	o	130				195			
	m	197				232			
	q	330				472			
Oil filling (dm^3)		130	150	170	190	130	150	170	190
Displacement (dm^3)		200	225	245	265	207	232	252	272
Weight (kg)		270				275			

Unit: mm

Appendix 29. SHZV I 1000A (ZnO protection) overall dimensions with coarse & fine change-over selector, cylinder type

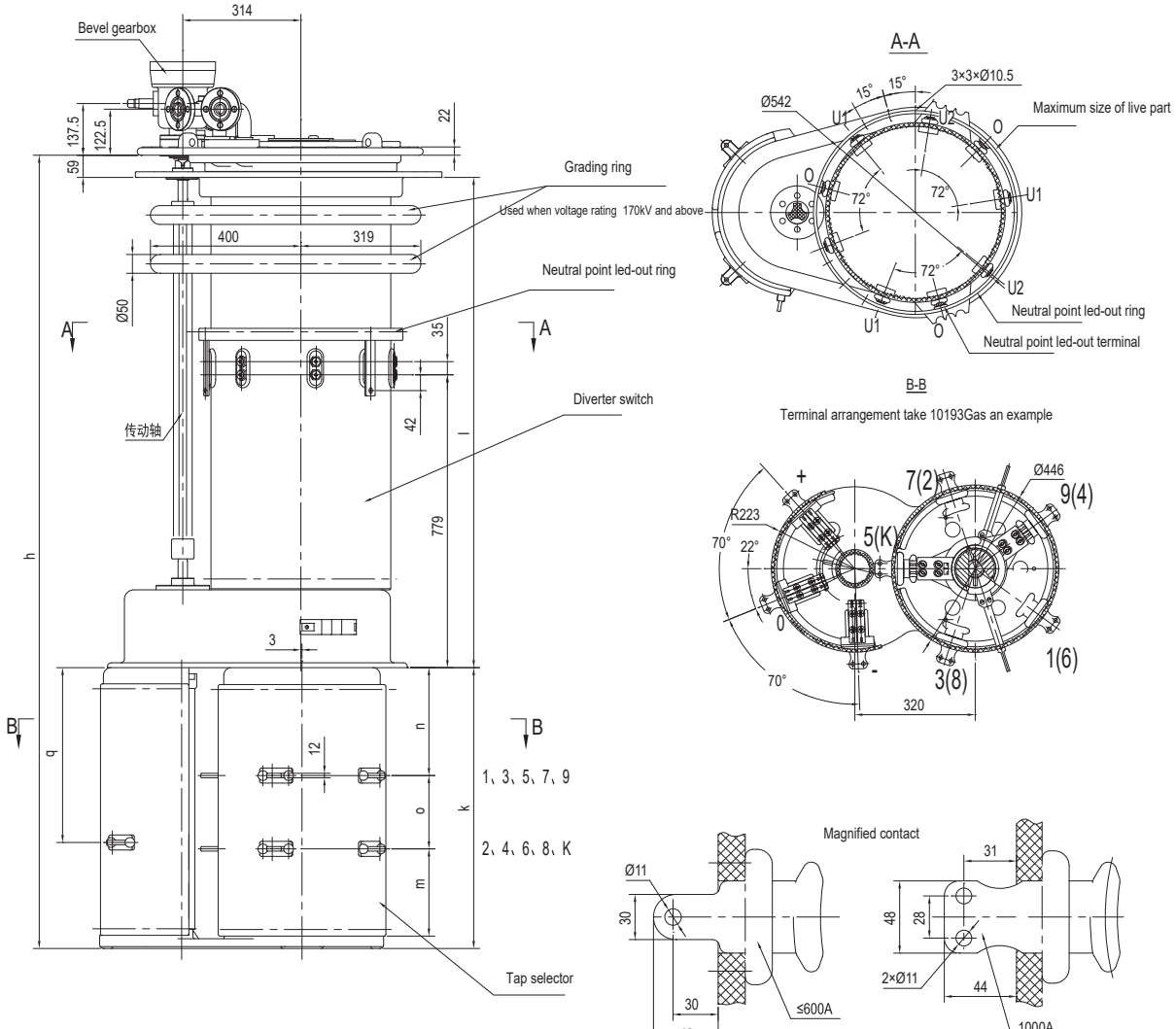

E2: Bleeding of transformer tank
R: Connecting flange for protective relay
S: Connecting flange for suction pipe
Q: Connecting flange for oil return
Note: All connection pipes and upper gearbox can e turned in 360 degrees.

Model		SHZV I 400/600/1000/72.5~252/C				SHZV I 400/600/1000/72.5~252/D			
Highest voltage for equipment (kV)		72.5	126	170	252	72.5	126	170	252
Dimensions (mm)	h	1940	2070	2200	2300	2110	2240	2370	2470
	j	1304	1434	1584	1684	1304	1434	1584	1684
	k	577				747			
	n	217				287			
	o	130				195			
	m	197				232			
	q	330				465			
Oil filling (dm^3)		130	150	170	190	130	150	170	190
Displacement (dm^3)		200	225	245	265	207	232	252	272
Weight (kg)		270				275			

Unit: mm

Appendix 30. SHZV I 400/600/1000A (ZnO protection) overall dimensions without change-over selector, cylinder tap selector

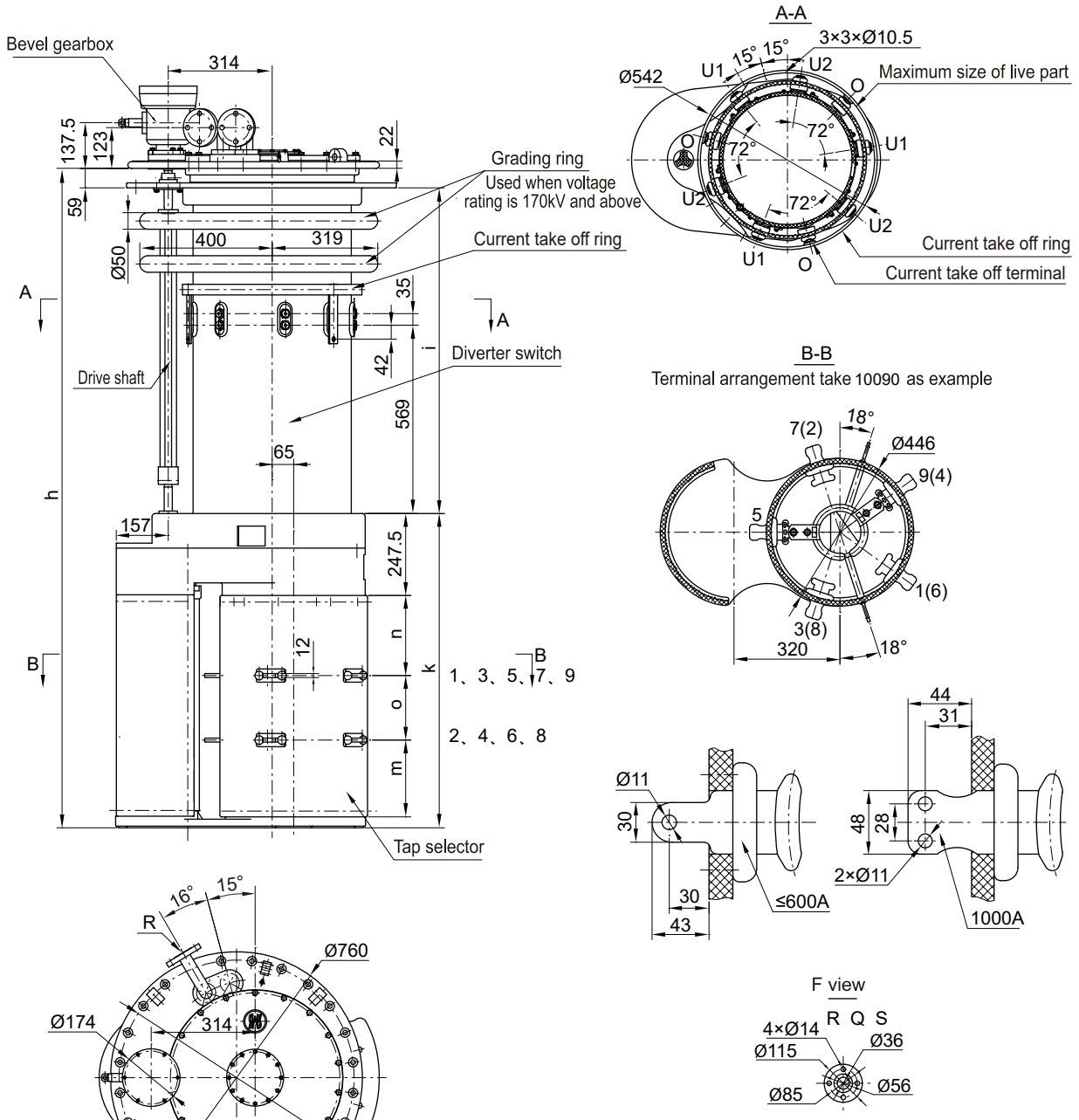

OLTC type		SHZV I 400/600/1000/72.5～252/C				SHZV I 400/600/1000/72.5～252/D/DE			
The highest voltage for equipment (kV)		72.5	126	170	252	72.5	126	170	252
Dimensions (mm)	h	1932.5	2062.5	2192.5	2292.5	2102.5	2232.5	2362.5	2462.5
	i	1094	1224	1354	1454	1094	1224	1354	1454
	k	779.5				949.5			
	n	172				242			
	o	130				195			
	m	197				232			
Oil filling dm^3		135	155	175	195	135	155	175	195
Displacement dm^3		205	230	250	270	212	237	257	277
Weight kg		270				275			

E2: Bleeding of transformer tank
R: Connecting flange for protective relay
S: Connecting flange for suction pipe
Q: Connecting flange for oil return

Note: All connection pipe and upper gearbox can be turned in 360°

Unit: mm

Appendix 31. SHZV I 400/600/1000A (ZnO protection) overall dimensions with reversing switch, cylinder tap selector

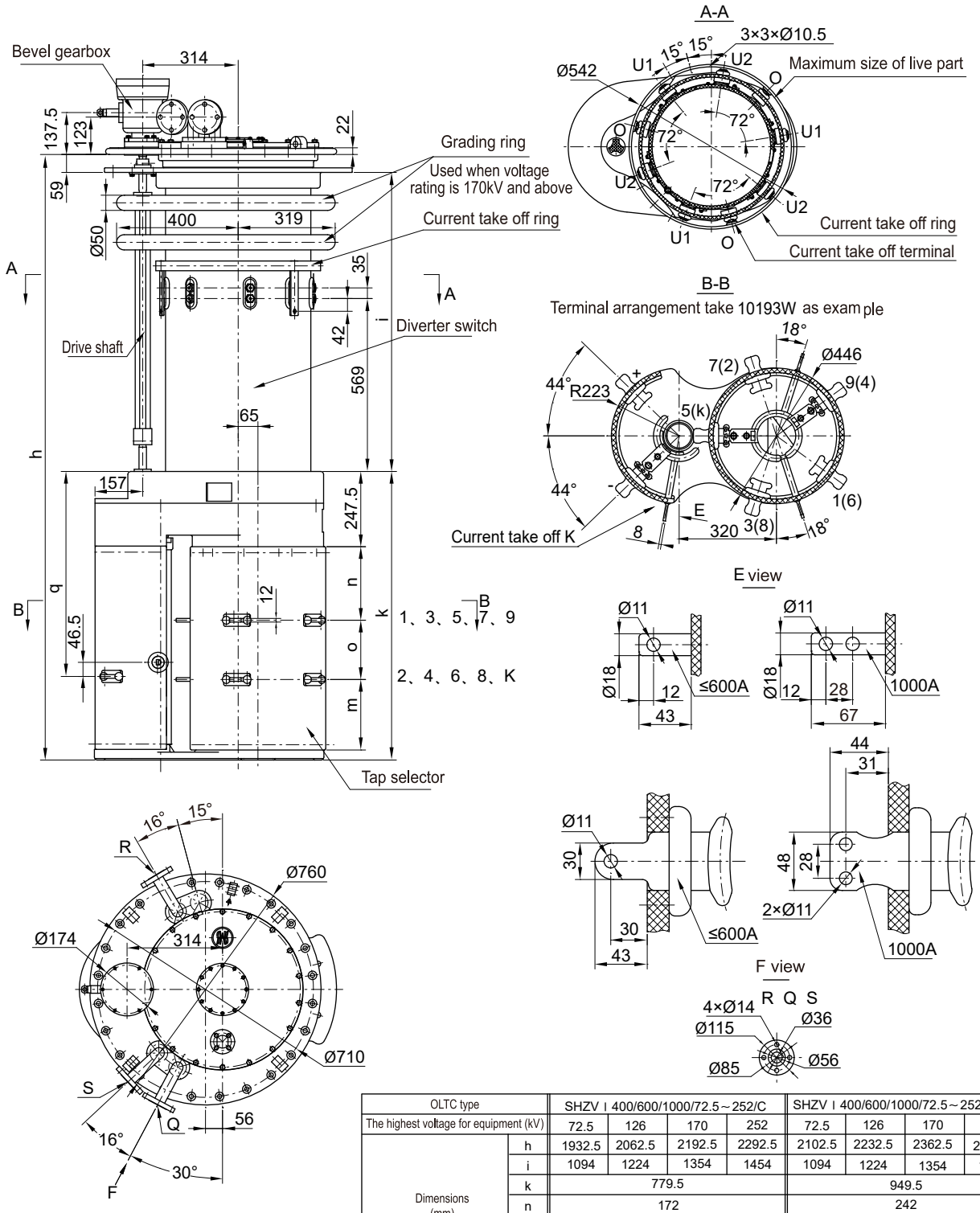

OLTC type		SHZV I 400/600/1000/72.5～252/C				SHZV I 400/600/1000/72.5～252/D/DE			
The highest voltage for equipment (kV)		72.5	126	170	252	72.5	126	170	252
Dimensions (mm)	h	1932.5	2062.5	2192.5	2292.5	2102.5	2232.5	2362.5	2462.5
	i	1094	1224	1354	1454	1094	1224	1354	1454
	k	779.5				949.5			
	n	172				242			
	o	130				195			
	m	197				232			
	q	539.5				674.5			
Oil filling dm^3		135	155	175	195	135	155	175	195
Displacement dm^3		205	230	250	270	212	237	257	277
Weight kg		270				275			

E2: Bleeding of transformer tank
R: Connecting flange for protective relay
S: Connecting flange for suction pipe
Q: Connecting flange for oil return

Note: All connection pipe and upper gearbox can be turned in 360°

Unit: mm

Appendix 32. SHZV I 400/600/1000A (ZnO protection) overall dimensions with coarse & fine change-over selector, cylinder tap selector

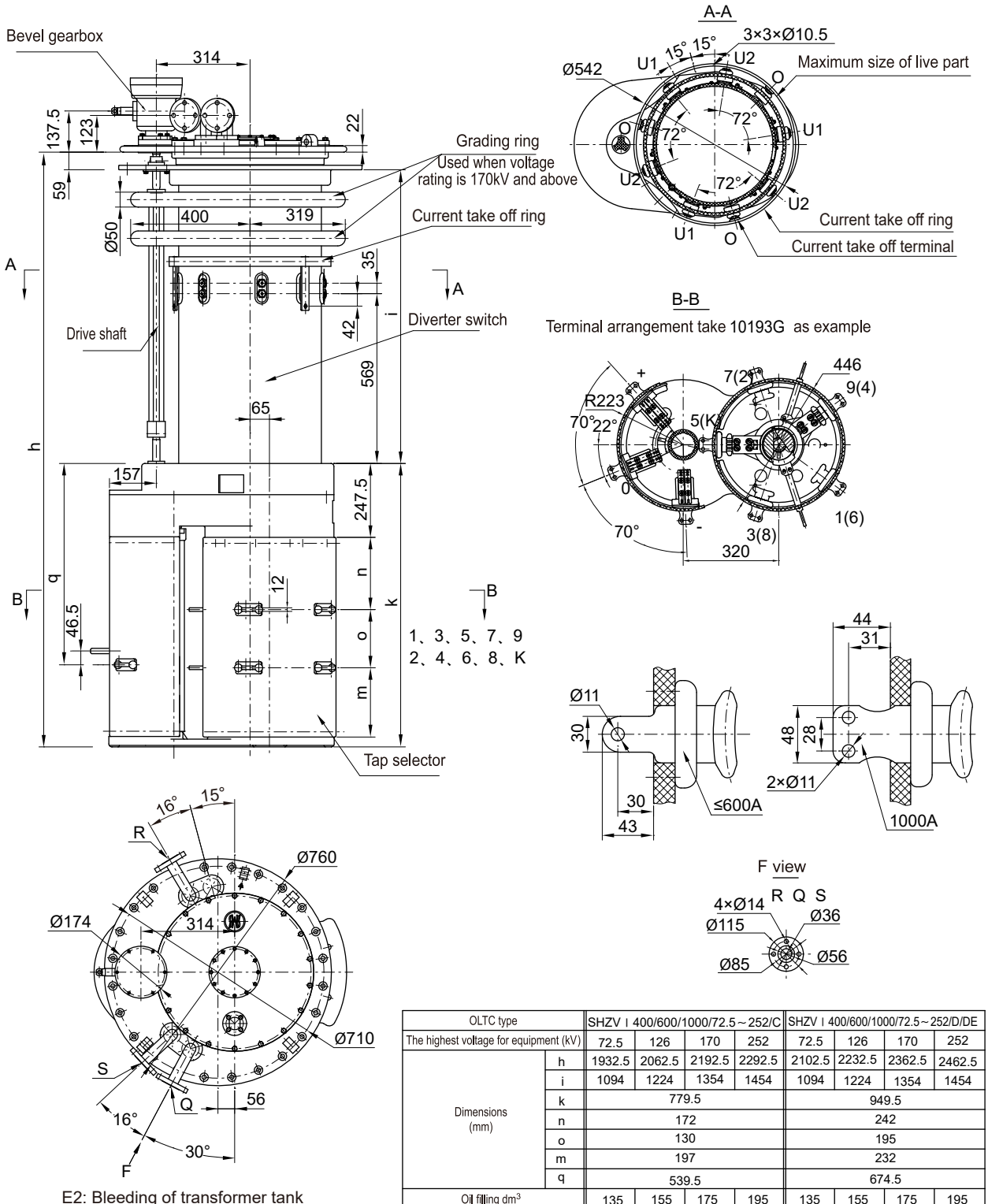

OLTC type		SHZV I 400/600/1000/72.5～252/C				SHZV I 400/600/1000/72.5～252/D/DE			
The highest voltage for equipment (kV)		72.5	126	170	252	72.5	126	170	252
Dimensions (mm)	h	1932.5	2062.5	2192.5	2292.5	2102.5	2232.5	2362.5	2462.5
	i	1094	1224	1354	1454	1094	1224	1354	1454
	k	779.5				949.5			
	n	172				242			
	o	130				195			
	m	197				232			
	q	539.5				674.5			
Oil filling dm^3		135	155	175	195	135	155	175	195
Displacement dm^3		205	230	250	270	212	237	257	277
Weight kg		270				275			

E2: Bleeding of transformer tank
R: Connecting flange for protective relay
S: Connecting flange for suction pipe
Q: Connecting flange for oil return

Note: All connection pipe and upper gearbox can be turned in 360°

Unit: mm

Appendix 33. SHZV I 1600A (ZnO protection) overall dimensions without change-over selector, cylinder tap selector

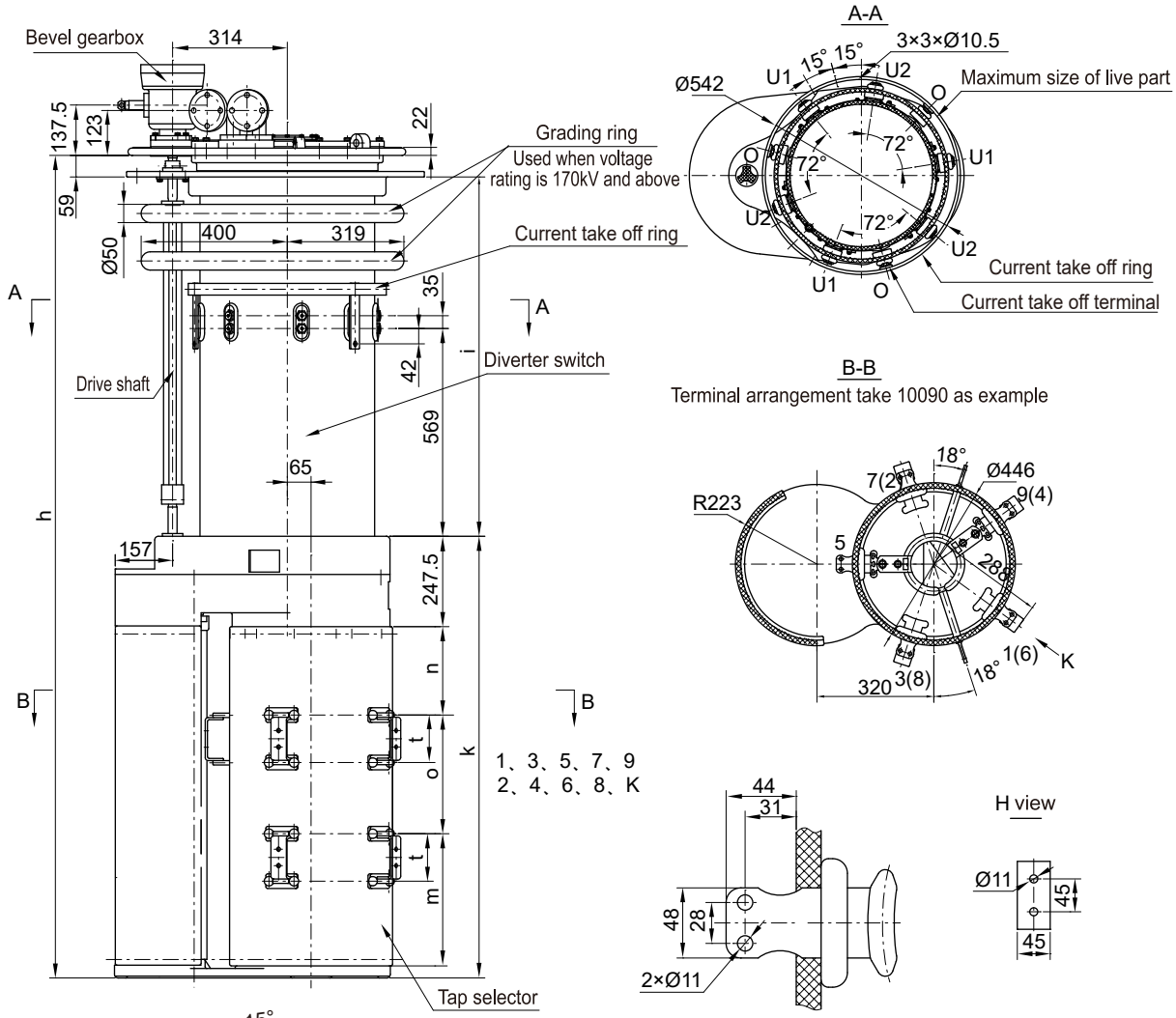

OLTC type		SHZV I 1600/72.5～252/C				SHZV I 1600/72.5～252/D/DE			
The highest voltage for equipment (kV)		72.5	126	170	252	72.5	126	170	252
Dimensions (mm)	h	2192.5	2322.5	2452.5	2552.5	2362.5	2492.5	2622.5	2722.5
	i	1094	1224	1354	1454	1094	1224	1354	1454
	k	1039.5				1209.5			
	n	172				242			
	o	260				325			
	t	130				130			
	m	327				362			
Oil filling dm^3		135	155	175	195	135	155	175	195
Displacement dm^3		205	230	250	270	212	237	257	277
Weight kg		275				280			

E2: Bleeding of transformer tank
R: Connecting flange for protective relay
S: Connecting flange for suction pipe
Q: Connecting flange for oil return

Note: All connection pipe and upper gearbox can be turned in 360°

Unit: mm

Appendix 34. SHZV I 1600A (ZnO protection) overall dimensions with reversing switch, cylinder tap selector

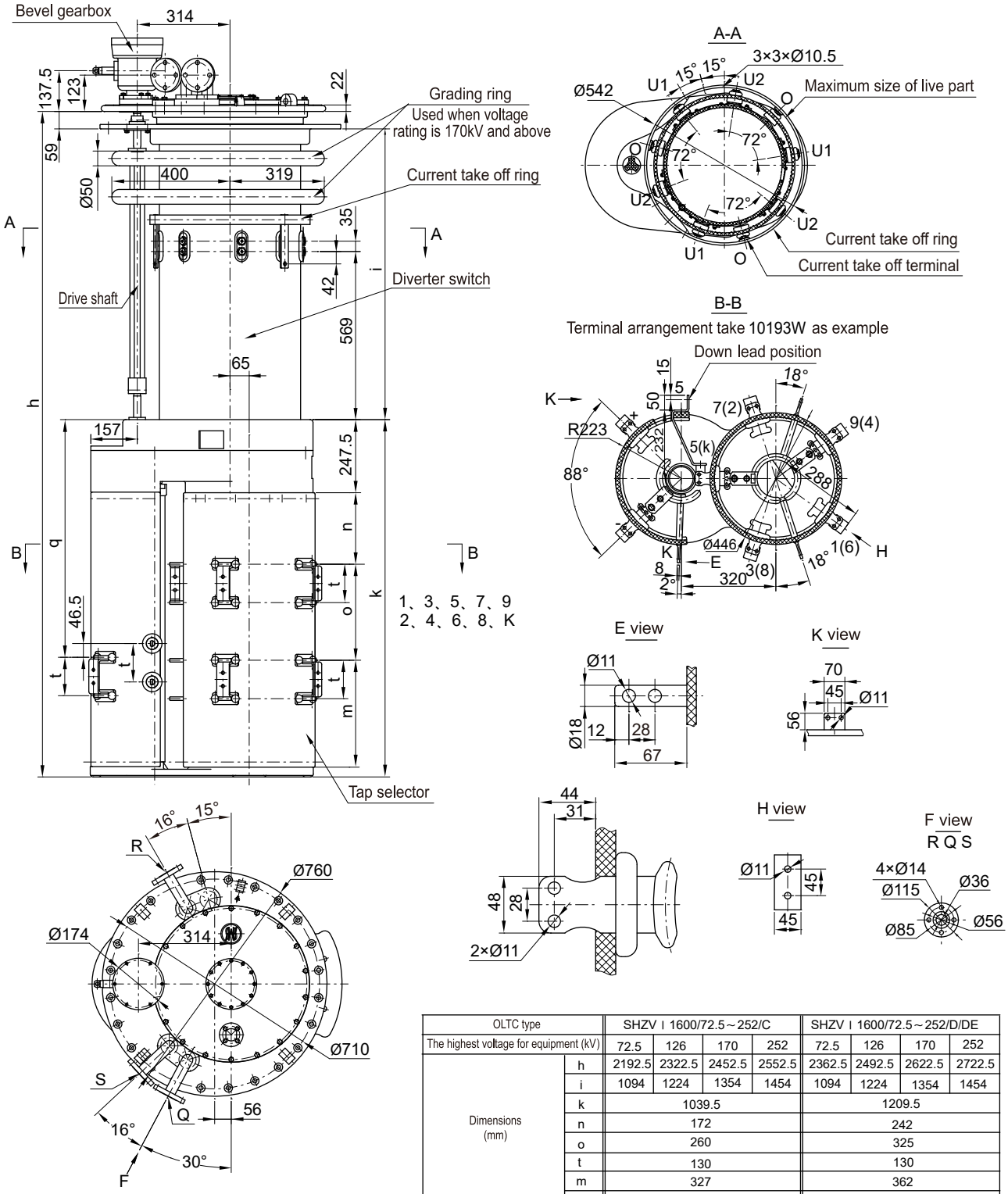

OLTC type		SHZV I 1600/72.5～252/C				SHZV I 1600/72.5～252/D/DE			
The highest voltage for equipment (kV)		72.5	126	170	252	72.5	126	170	252
Dimensions (mm)	h	2192.5	2322.5	2452.5	2552.5	2362.5	2492.5	2622.5	2722.5
	i	1094	1224	1354	1454	1094	1224	1354	1454
	k	1039.5				1209.5			
	n	172				242			
	o	260				325			
	t	130				130			
	m	327				362			
	q	669.5				804.5			
Oil filling dm^3		140	160	180	200	140	160	180	200
Displacement dm^3		210	235	255	275	217	242	262	282
Weight kg		280				285			

E2: Bleeding of transformer tank
R: Connecting flange for protective relay
S: Connecting flange for suction pipe
Q: Connecting flange for oil return

Note: All connection pipe and upper gearbox can be turned in 360°

Unit: mm

Appendix 35. SHZV I 1600A (ZnO protection) overall dimensions with coarse/fine change-over selector, cylinder tap selector

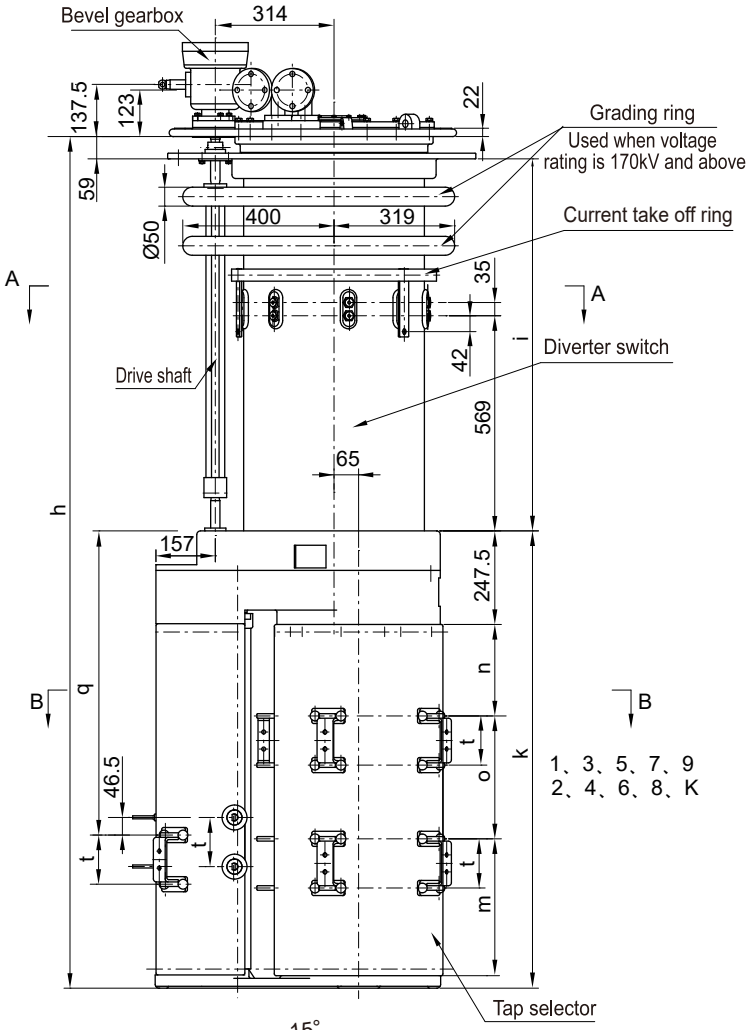

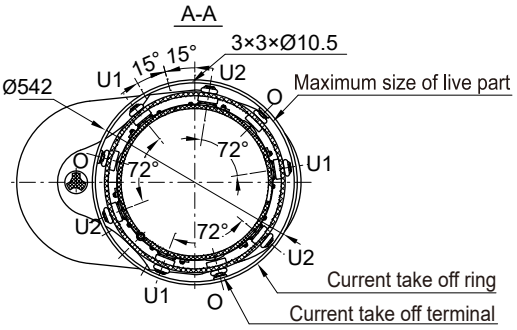

B-B

Terminal arrangement take 10193G as example

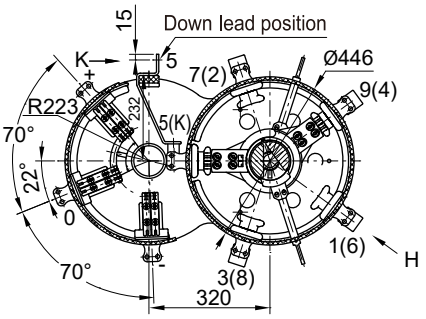

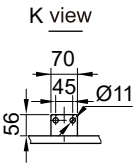

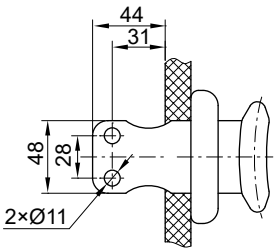

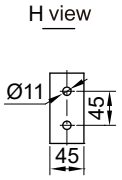

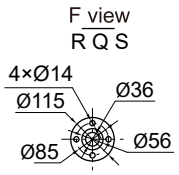

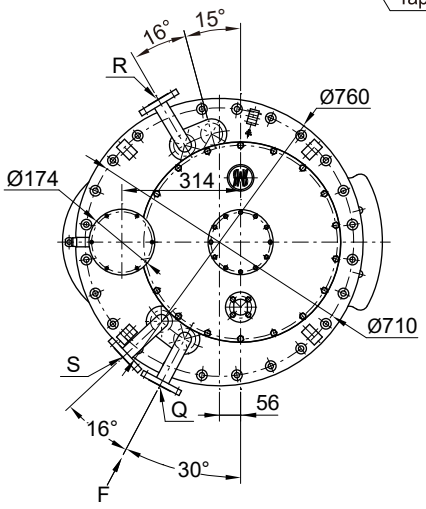

OLTC type		SHZV I 1600/72.5～252/C				SHZV I 1600/72.5～252/D/DE			
The highest voltage for equipment (kV)		72.5	126	170	252	72.5	126	170	252
Dimensions (mm)	h	2192.5	2322.5	2452.5	2552.5	2362.5	2492.5	2622.5	2722.5
	i	1094	1224	1354	1454	1094	1224	1354	1454
	k	1039.5				1209.5			
	n	172				242			
	o	260				325			
	t	130				130			
	m	327				362			
	q	669.5				804.5			
Oil filling dm^3		140	160	180	200	140	160	180	200
Displacement dm^3		210	235	255	275	217	242	262	282
Weight kg		280				285			

E2: Bleeding of transformer tank
R: Connecting flange for protective relay
S: Connecting flange for suction pipe
Q: Connecting flange for oil return

Note: All connection pipe and upper gearbox can be turned in 360°

Unit: mm

Appendix 36. SHZV I 2400A (ZnO protection) overall dimensions without change-over selector, cylinder tap selector

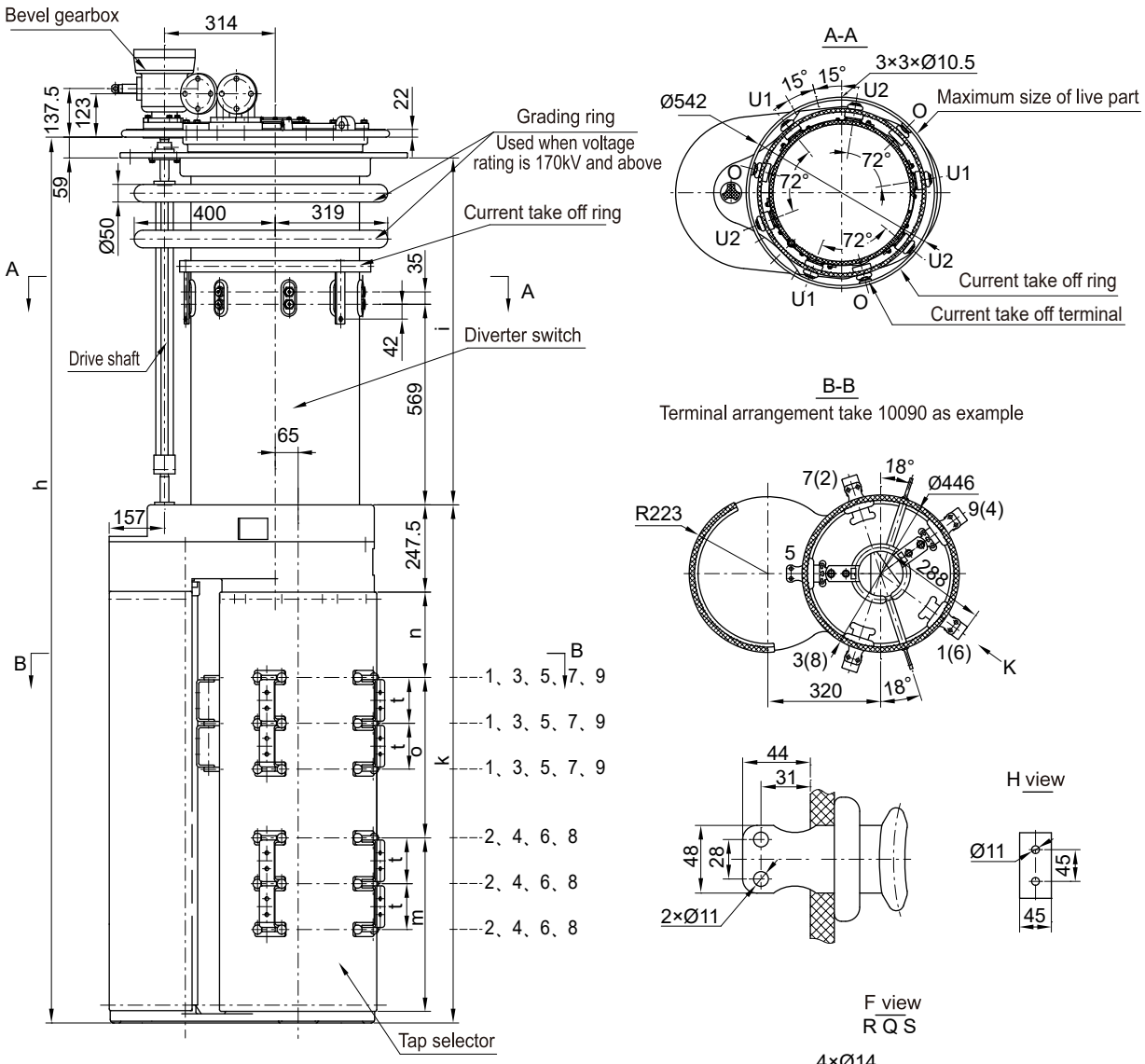

E2: Bleeding of transformer tank
R: Connecting flange for protective relay
S: Connecting flange for suction pipe
Q: Connecting flange for oil return

OLTC type		SHZV I 2400/72.5～252/C				SHZV I 2400/72.5～252/D/DE			
The highest voltage for equipment (kV)		72.5	126	170	252	72.5	126	170	252
Dimensions (mm)	h	2452.5	2582.5	2712.5	2712.5	2622.5	2752.5	2882.5	2982.5
	i	1094	1224	1354	1454	1094	1224	1354	1454
	k	1299.5				1469.5			
	n	172				242			
	o	390				455			
	t	130				130			
	m	457				492			
Oil filling dm^3		135	155	175	195	135	155	175	195
Displacement dm^3		205	230	250	270	212	237	257	277
Weight kg		280				285			

Note: All connection pipe and upper gearbox can be turned in 360° Unit: mm

Appendix 37. SHZV I 2400A (ZnO protection) overall dimensions with reversing switch, cylinder tap selector

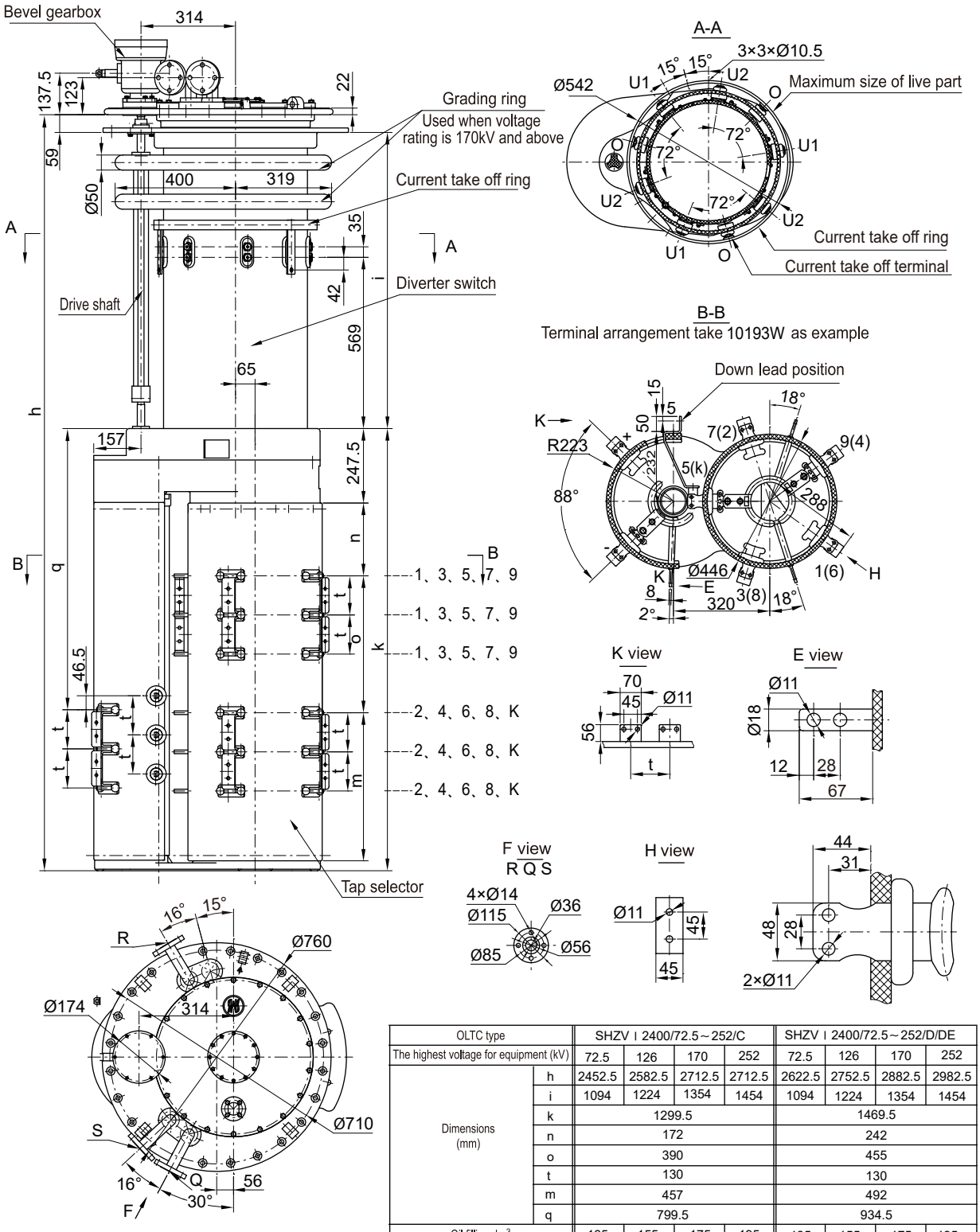

OLTC type		SHZV I 2400/72.5～252/C				SHZV I 2400/72.5～252/D/DE			
The highest voltage for equipment (kV)		72.5	126	170	252	72.5	126	170	252
Dimensions (mm)	h	2452.5	2582.5	2712.5	2712.5	2622.5	2752.5	2882.5	2982.5
	i	1094	1224	1354	1454	1094	1224	1354	1454
	k	1299.5				1469.5			
	n	172				242			
	o	390				455			
	t	130				130			
	m	457				492			
	q	799.5				934.5			
Oil filling dm^3		135	155	175	195	135	155	175	195
Displacement dm^3		205	230	250	270	212	237	257	277
Weight kg		280				285			

E2: Bleeding of transformer tank
R: Connecting flange for protective relay
S: Connecting flange for suction pipe
Q: Connecting flange for oil return

Note: All connection pipe and upper gearbox can be turned in 360°

Unit: mm

Appendix 38. SHZV I 2400A (ZnO protection) overall dimensions with coarse/fine change-over selector, cylinder tap selector

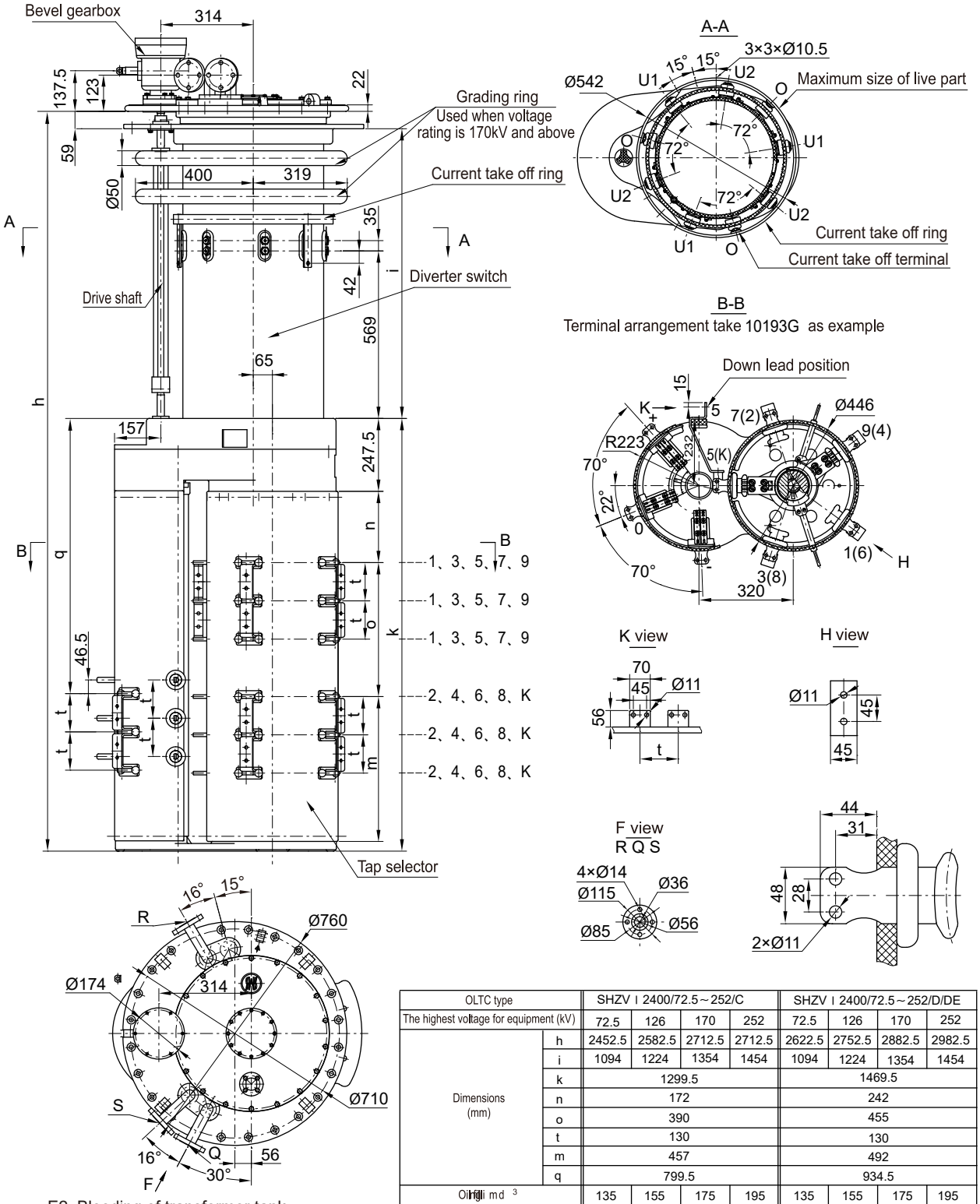

E2: Bleeding of transformer tank
R: Connecting flange for protective relay
S: Connecting flange for suction pipe
Q: Connecting flange for oil return

OLTC type		SHZV I 2400/72.5～252/C				SHZV I 2400/72.5～252/D/DE			
The highest voltage for equipment (kV)		72.5	126	170	252	72.5	126	170	252
Dimensions (mm)	h	2452.5	2582.5	2712.5	2712.5	2622.5	2752.5	2882.5	2982.5
	i	1094	1224	1354	1454	1094	1224	1354	1454
	k	1299.5				1469.5			
	n	172				242			
	o	390				455			
	t	130				130			
	m	457				492			
	q	799.5				934.5			
Oil filling dm^3		135	155	175	195	135	155	175	195
Displacement dm^3		205	230	250	270	212	237	257	277
Weight kg		280				285			

Note: All connection pipe and upper gearbox can be turned in 360° Unit: mm

Appendix 39. SHZV I 400/600A (ZnO protection) overall dimensions, with reversing switch, cage tap selector

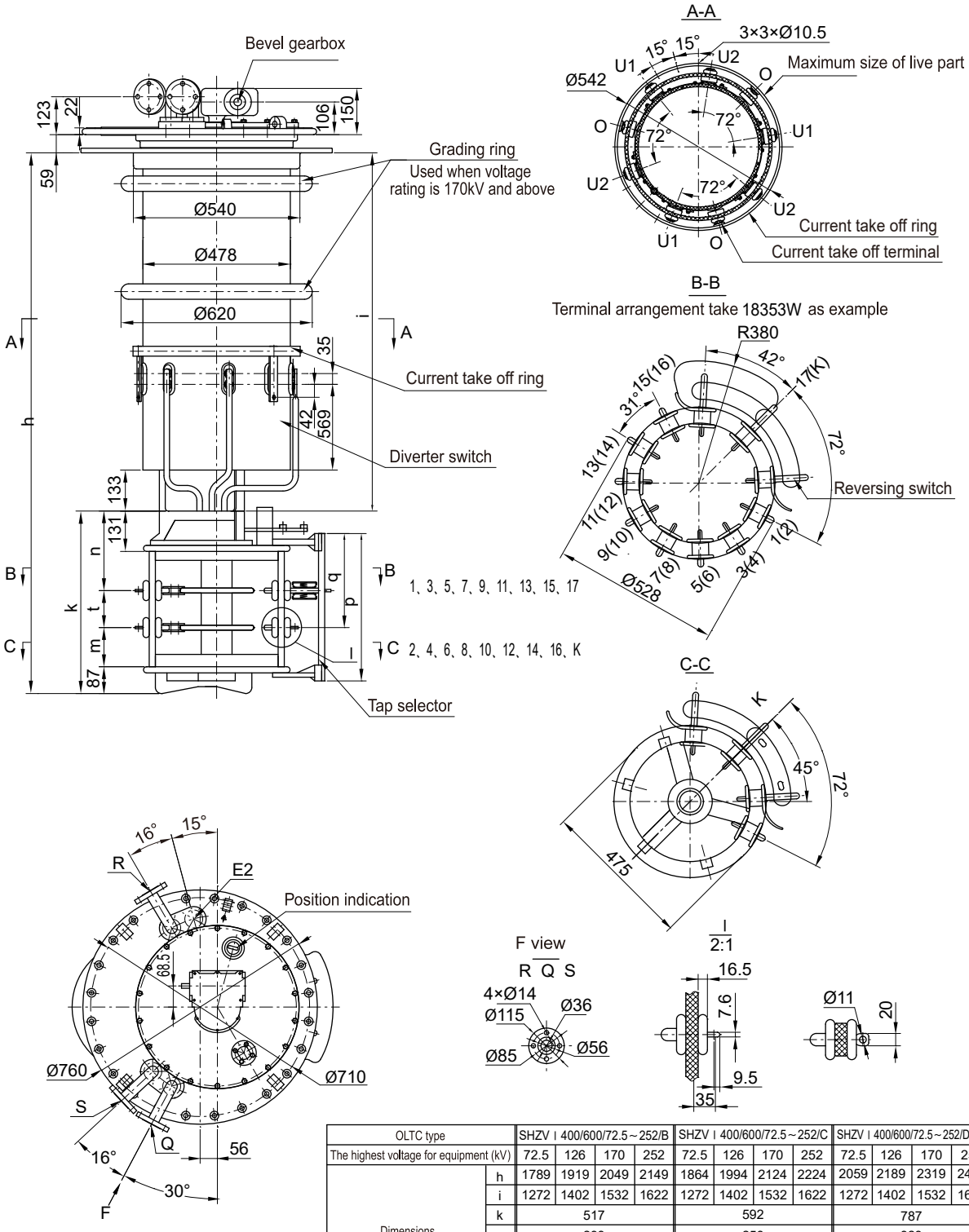

OLTC type		SHZV I 400/600/72.5～252/B				SHZV I 400/600/72.5～252/C				SHZV I 400/600/72.5～252/D/DE			
The highest voltage for equipment (kV)		72.5	126	170	252	72.5	126	170	252	72.5	126	170	252
Dimensions (mm)	h	1789	1919	2049	2149	1864	1994	2124	2224	2059	2189	2319	2419
	i	1272	1402	1532	1622	1272	1402	1532	1622	1272	1402	1532	1622
	k	517				592				787			
	n	233				258				323			
	t	95				120				185			
	m	102				127				192			
	q	160				185				250			
	p	403				478				673			
Oil filling dm^3		135	155	175	195	135	155	175	195	135	155	175	195
Displacement dm^3		204	229	249	269	205	230	250	270	212	237	257	277
Weight kg		270				275				280			

E2: Bleeding of transformer tank
R: Connecting flange for protective relay
S: Connecting flange for suction pipe
Q: Connecting flange for oil return
Note: All connection pipe and upper gearbox can be turned in 360°

Unit: mm

Appendix 40. SHZV I 1200A (ZnO protection) overall dimensions, with reversing switch, cage tap selector

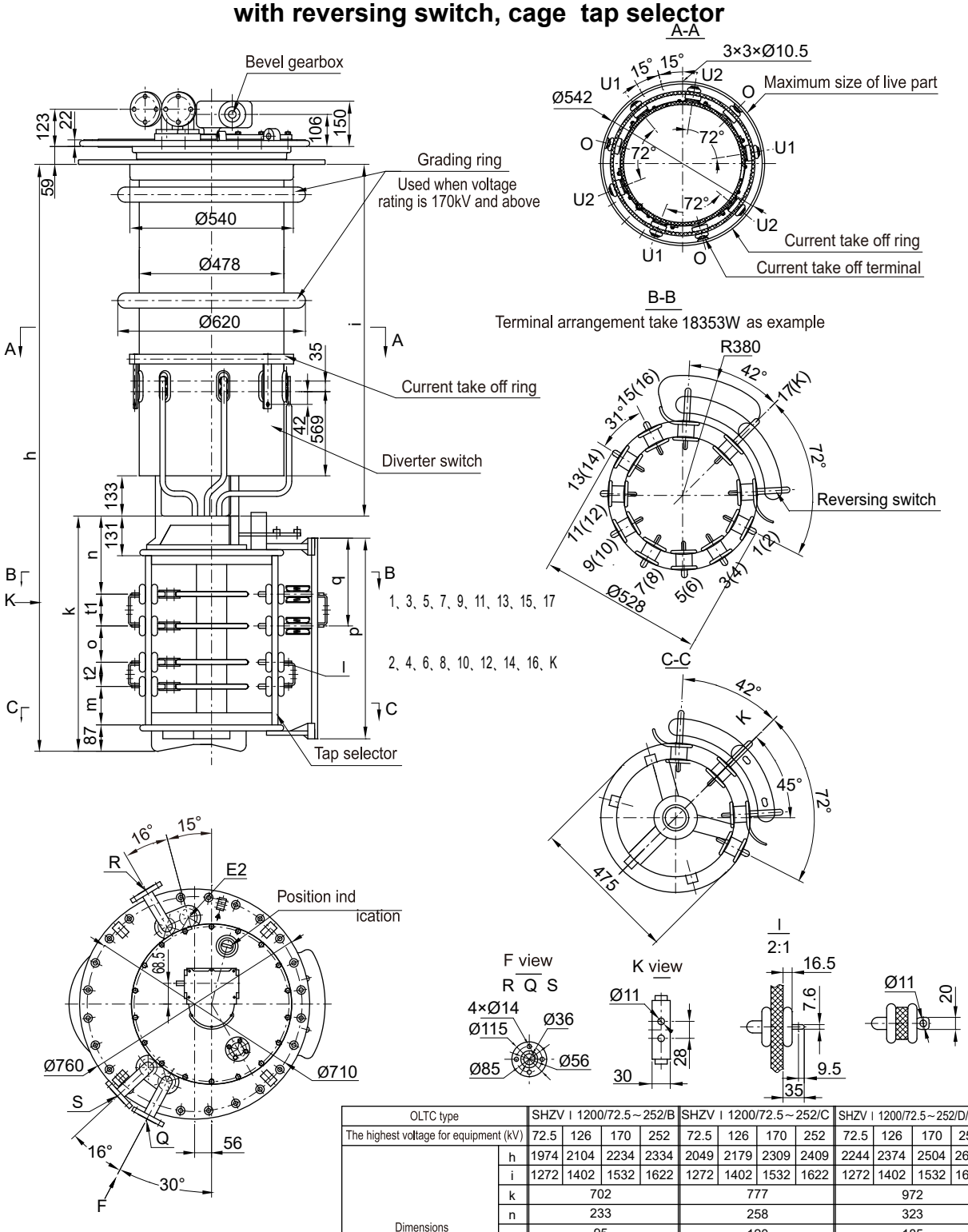

E2: Bleeding of transformer tank
R: Connecting flange for protective relay
S: Connecting flange for suction pipe
Q: Connecting flange for oil return

Note: All connection pipe and upper gearbox can be turned in 360°

OLTC type		SHZV I 1200/72.5～252/B				SHZV I 1200/72.5～252/C				SHZV I 1200/72.5～252/D/DE			
The highest voltage for equipment (kV)		72.5	126	170	252	72.5	126	170	252	72.5	126	170	252
Dimensions (mm)	h	1974	2104	2234	2334	2049	2179	2309	2409	2244	2374	2504	2604
	i	1272	1402	1532	1622	1272	1402	1532	1622	1272	1402	1532	1622
	k	702				777				972			
	n	233				258				323			
	o	95				120				185			
	t1	105				105				105			
	t2	80				80				80			
	m	102				127				192			
	q	160				185				250			
	p	588				663				858			
Oil filling dm^3		135	155	175	195	135	155	175	195	135	155	175	195
Displacement dm^3		204	229	249	269	205	230	250	270	212	237	257	277
Weight kg		280				285				300			

Unit: mm

Appendix 41. SHZV I 1500A (ZnO protection) overall dimensions, with reversing switch, cage tap selector

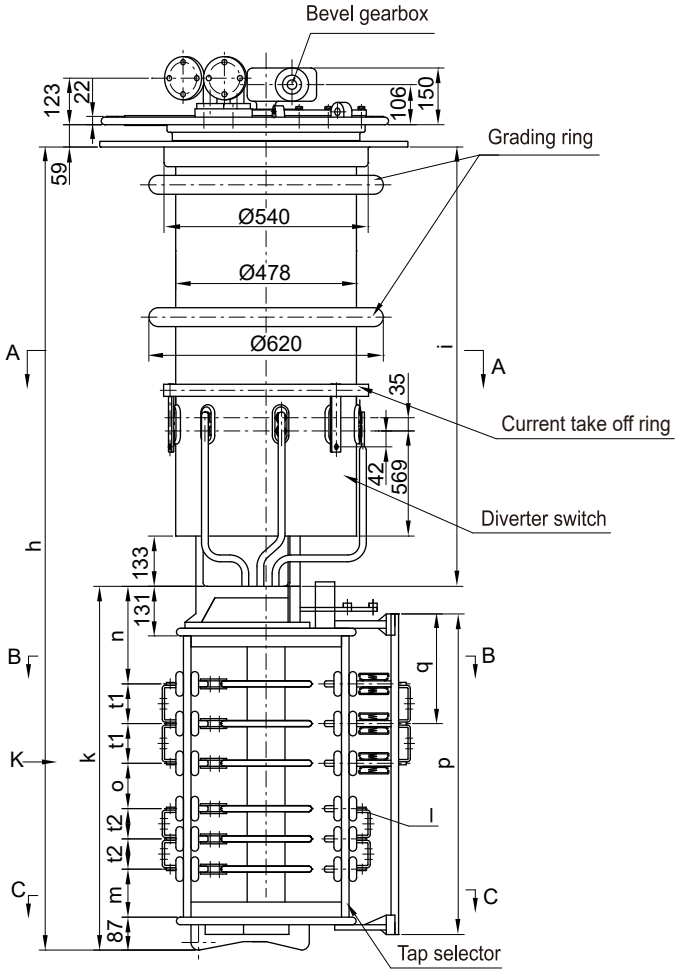

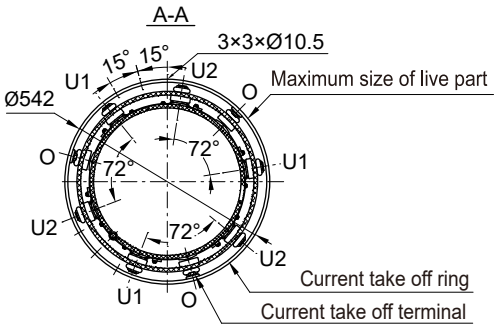

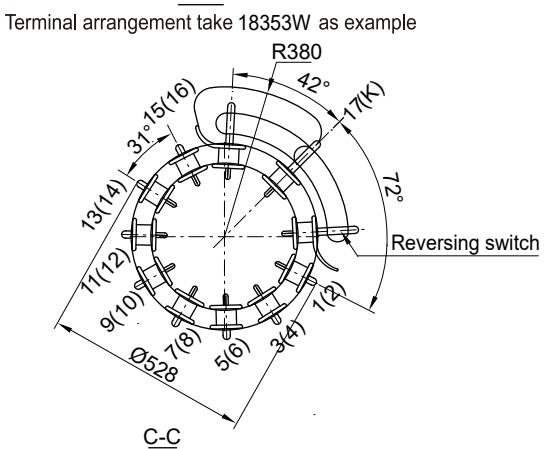

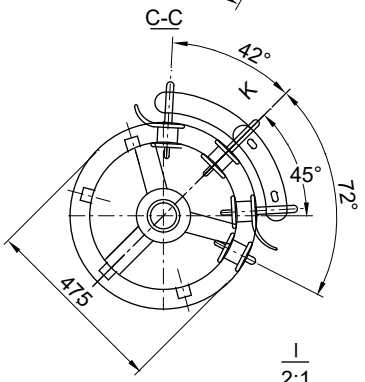

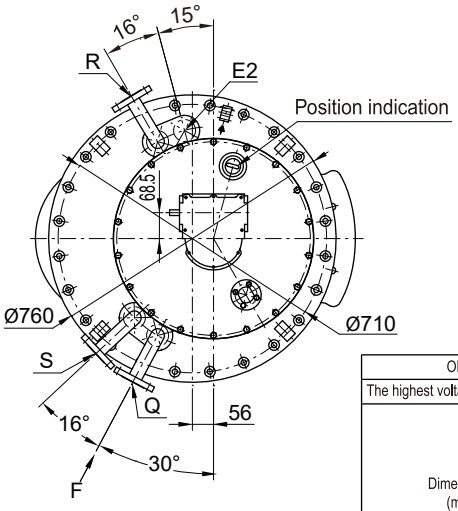

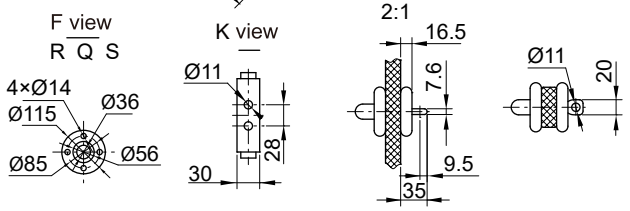

E2: Bleeding of transformer tank
R: Connecting flange for protective relay
S: Connecting flange for suction pipe
Q: Connecting flange for oil return

Note: All connection pipe and upper gearbox can be turned in 360°

OLTC type		SHZV I 1500/72.5～252/B				SHZV I 1500/72.5～252/C				SHZV I 1500/72.5～252/D/DE			
The highest voltage for equipment (kV)		72.5	126	170	252	72.5	126	170	252	72.5	126	170	252
Dimensions (mm)	h	2159	2289	2419	2519	2234	2364	2494	2594	2429	2559	2689	2789
	i	1272	1402	1532	1622	1272	1402	1532	1622	1272	1402	1532	1622
	k	887				962				1157			
	n	233				258				323			
	o	95				120				185			
	t1	105				105				105			
	t2	80				80				80			
	m	102				127				192			
	q	160				185				250			
	p	773				848				1043			
Oil filling dm^3		135	155	175	195	135	155	175	195	135	155	175	195
Displacement dm^3		204	229	249	269	205	230	250	270	212	237	257	277
Weight kg		285				290				295			

Unit: mm

Appendix 42. SHZV tap selector contacts arrangement, cylinder typ selector

Without change-over selector

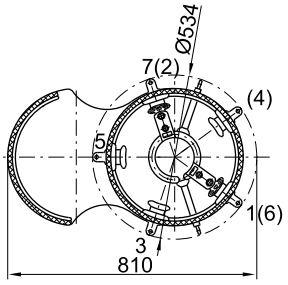

10070

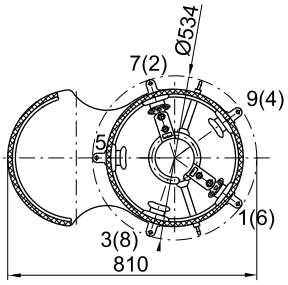

10090

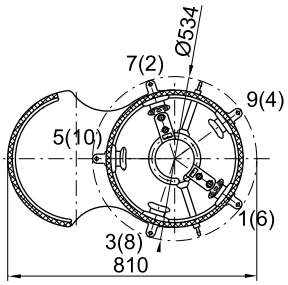

10100

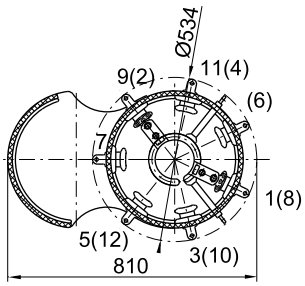

14120

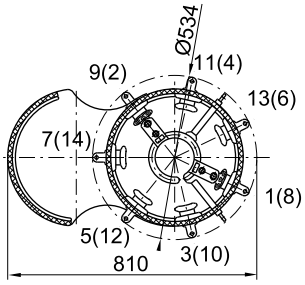

14140

With reversing switch

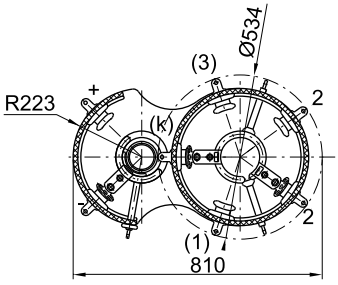

10051W

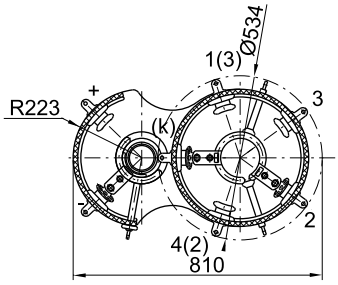

10071W

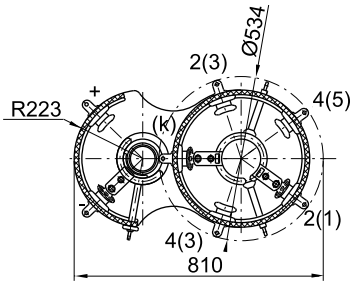

10091W

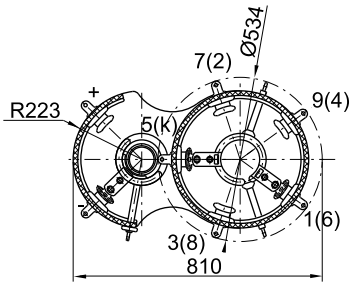

10191W

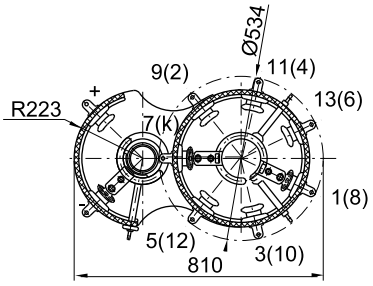

14271W

With coarse/fine change-over selector

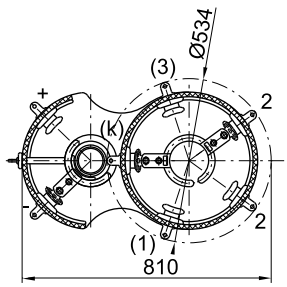

10051G

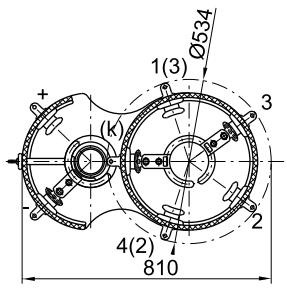

10071G

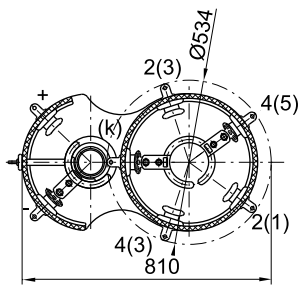

10091G

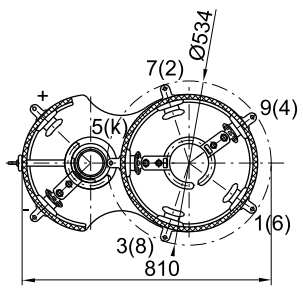

10191G

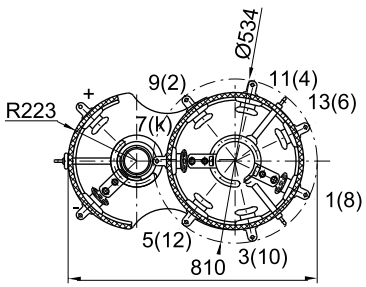

14271G

Unit: mm

Appendix 43. SHZV tap selector contacts arrangement, cage tap selector

Without change-over selector

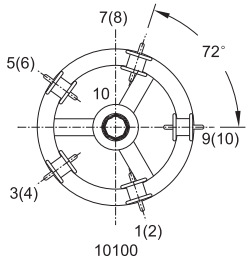

10100
(9Steps)

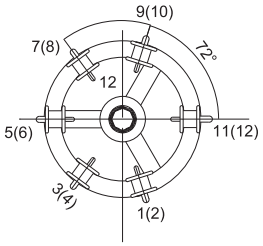

12120
(11Steps)

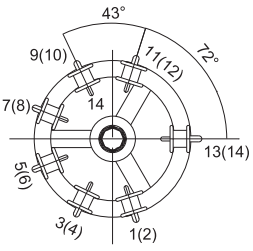

14140
(13Steps)

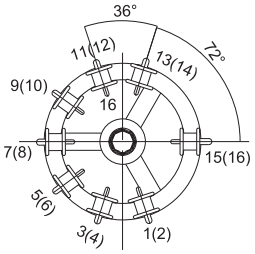

16160
(15Steps)

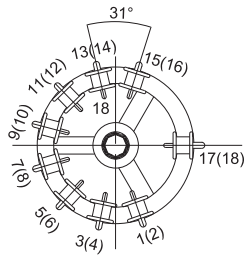

18180
(17Steps)

With reversing switch

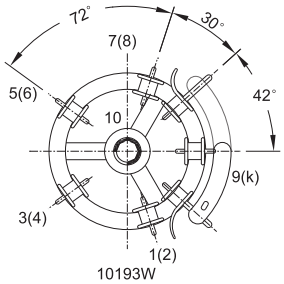

10193W
(±8Steps)

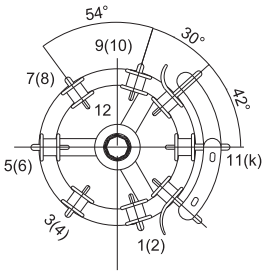

12231W
(±11Steps)

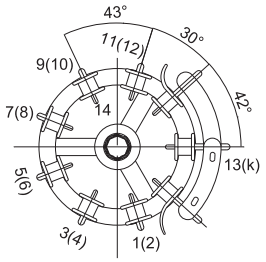

14271W
(±13Steps)

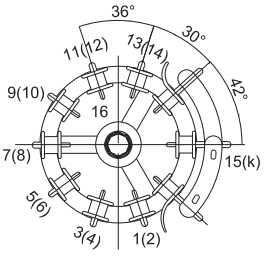

16311W
(±15Steps)

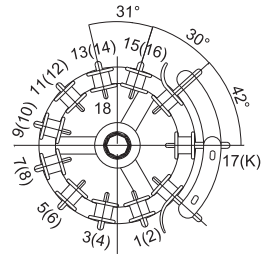

18351W
(±17Steps)

With coarse/fine change-over selector

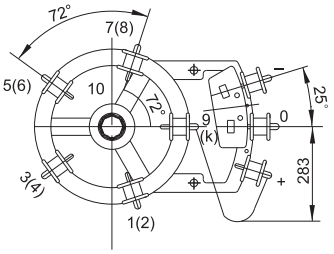

10193G
(±8Steps)

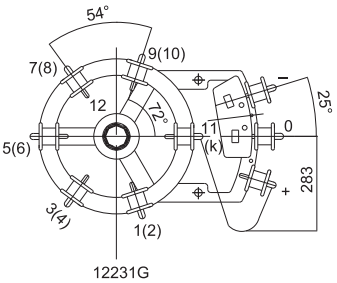

12231G
(±11Steps)

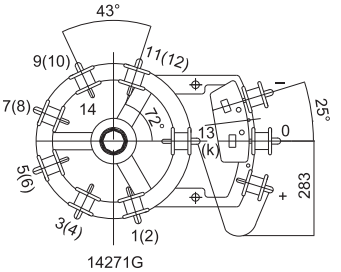

14271G
(±13Steps)

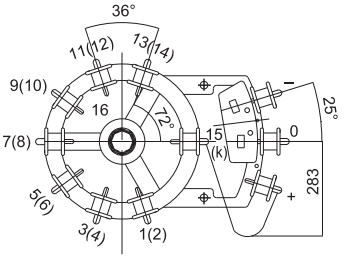

16311G
(±15Steps)

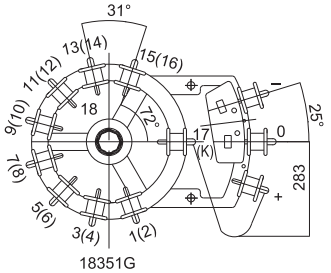

18351G
(±17Steps)

Unit: mm

Appendix 44. SHZV (10050) operating position table and connection diagram

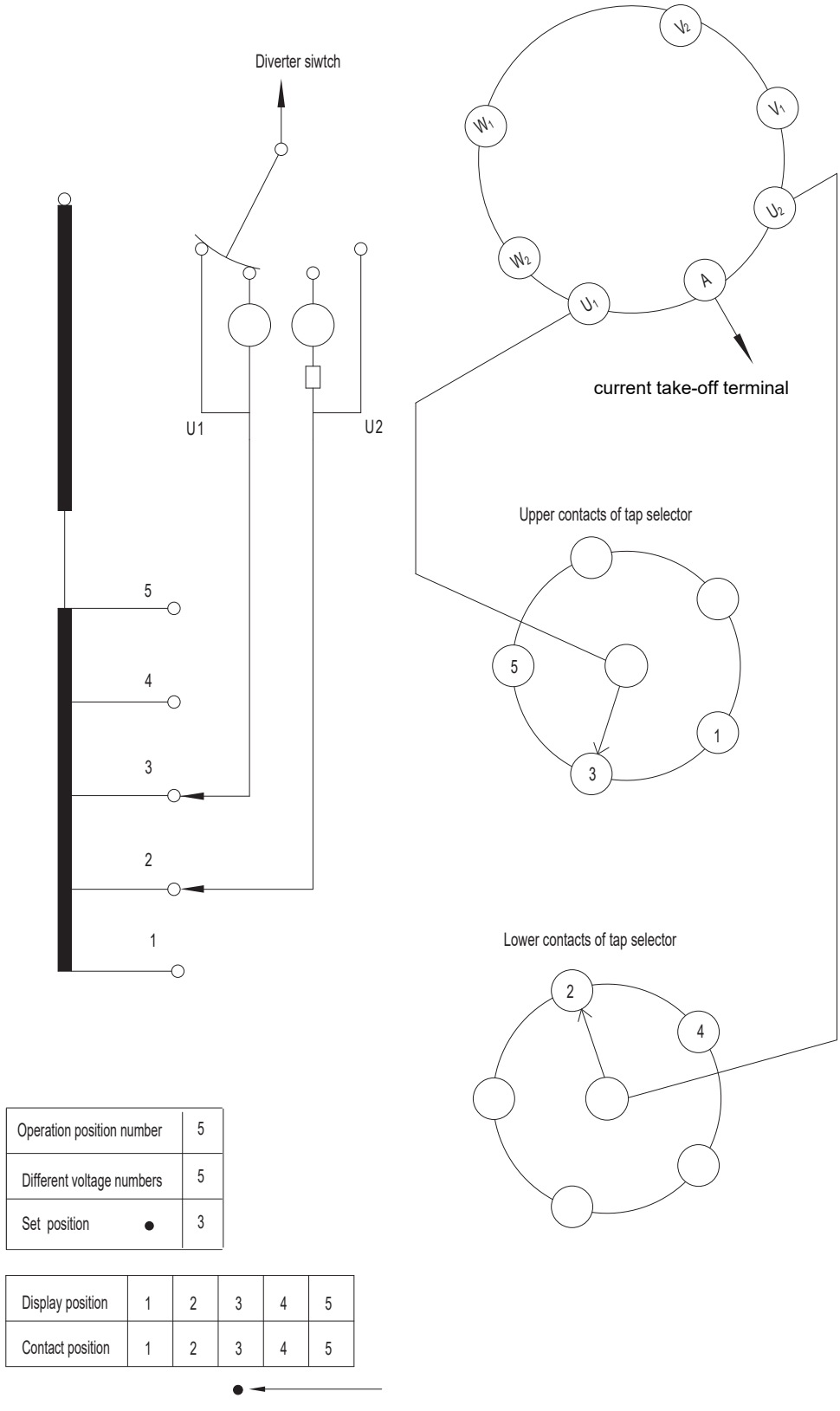

Operation position number	5
Different voltage numbers	5
Set position ●	3

Display position	1	2	3	4	5
Contact position	1	2	3	4	5

● ←

- Drawing is shown at the set position

Appendix 45. SHZV (10070) operating position table and connection diagram

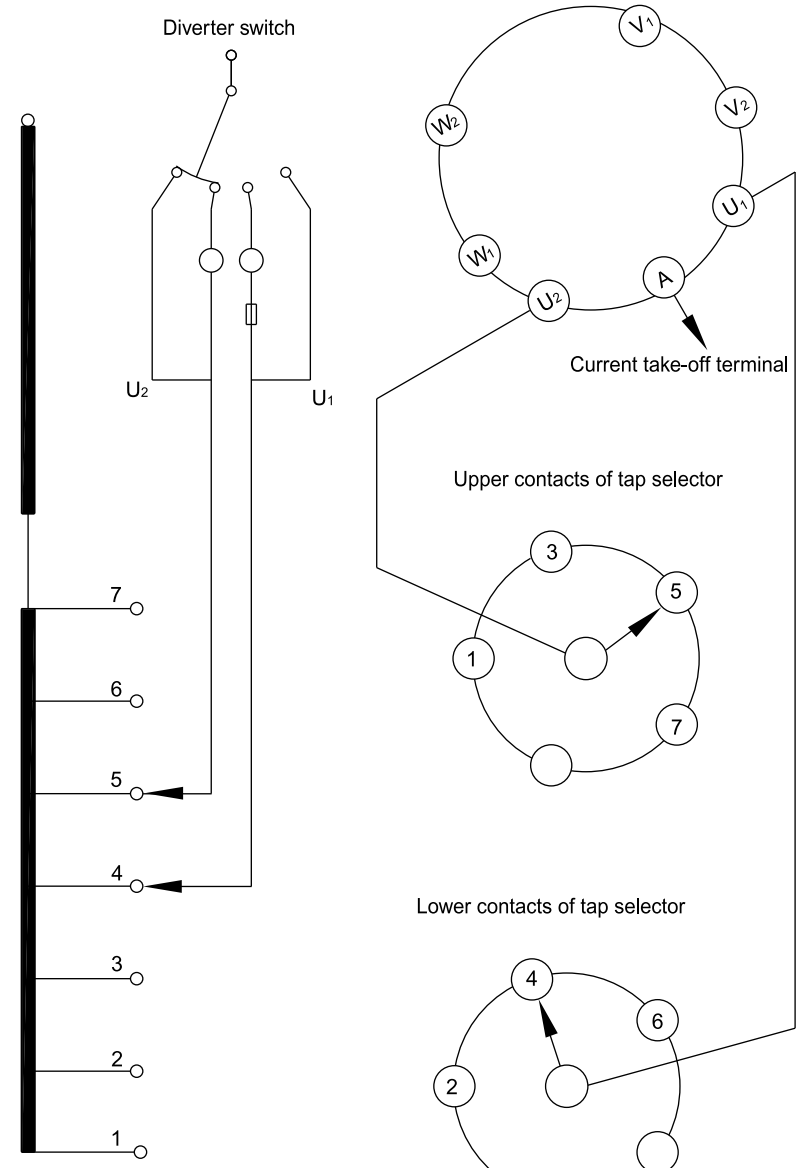

Operation position number	7
Different voltage number	7
Set position ●	4

Display position	1	2	3	4	5	6	7
Tap selector contact position	1	2	3	4	5	6	7

● ◄

● Drawing is shown at the set position

Appendix 46. SHZV (10090) operating position table and connection diagram

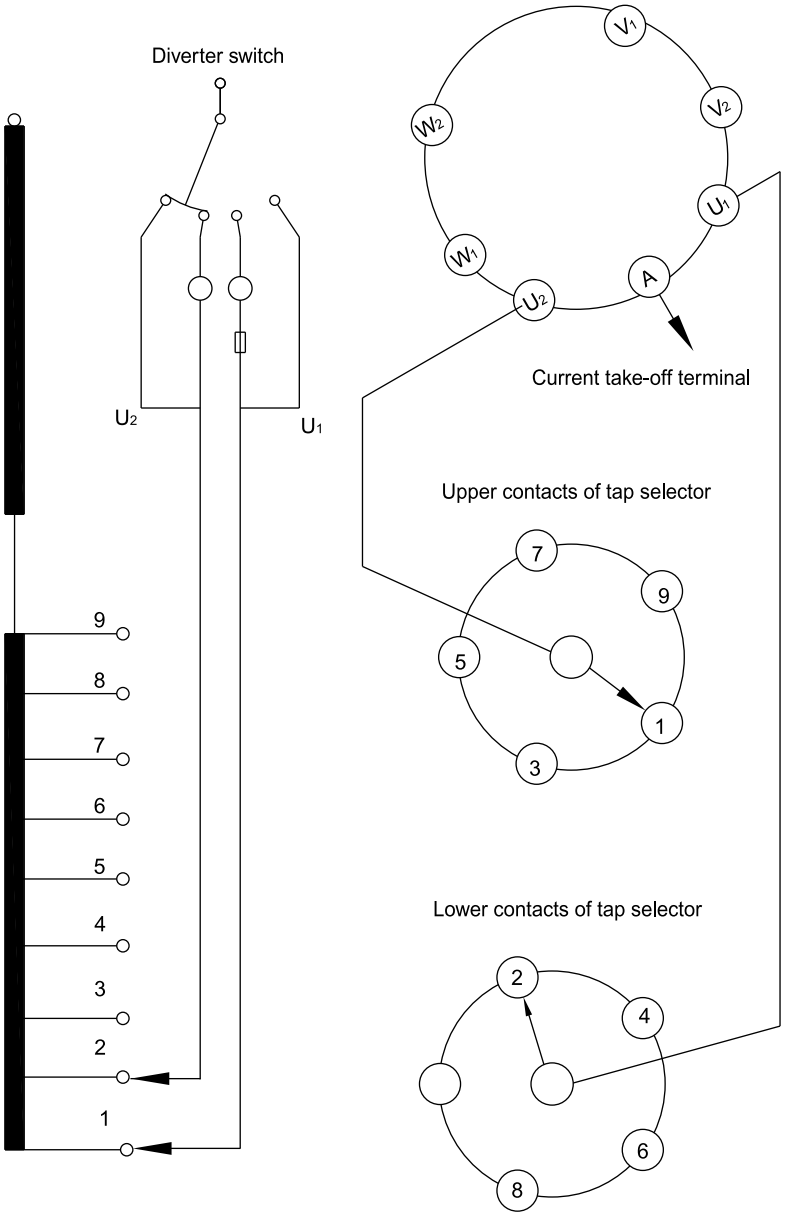

Operation position number	9
Different voltage number	9
Set position ●	5

Display position	1	2	3	4	5	6	7	8	9
Tap selector contact position	1	2	3	4	5	6	7	8	9

● Drawing is shown at the set position

Appendix 47. SHZV (10100) operating position table and connection diagram

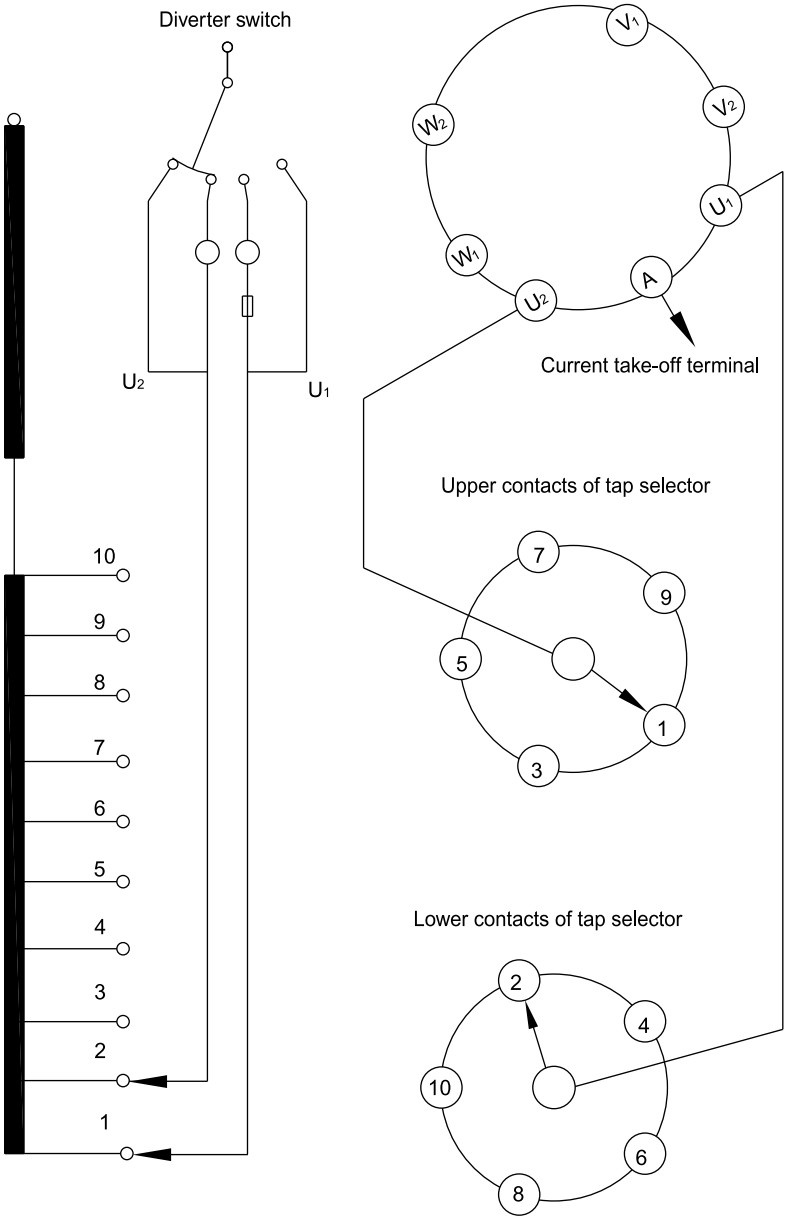

Operation position number	10
Different voltage number	10
Set position ●	6

Display position	1	2	3	4	5	6	7	8	9	10
Tap selector contact position	1	2	3	4	5	6	7	8	9	10

● Drawing is shown at the set position

Appendix 48. SHZV (14140) operating position table and connection diagram

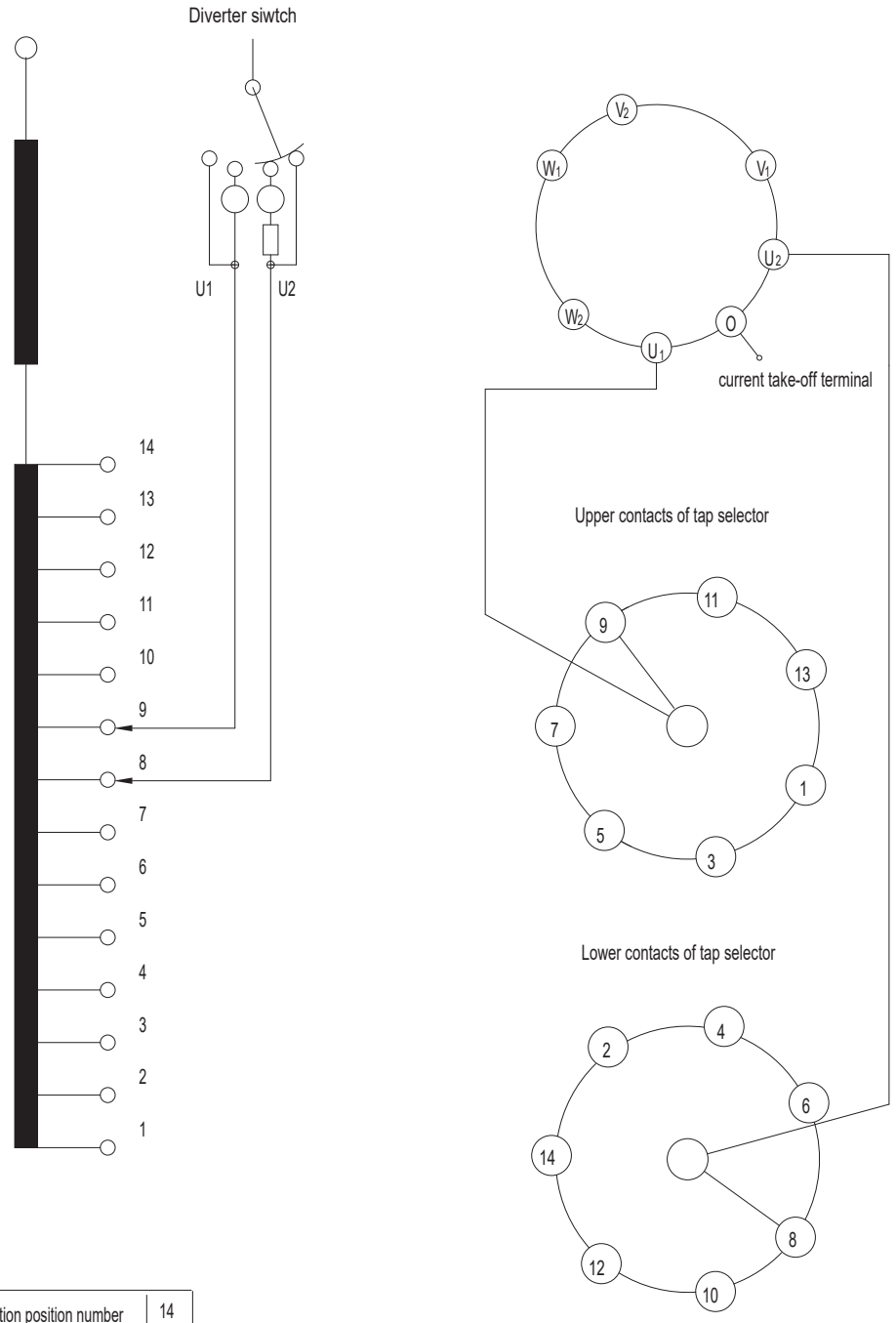

Operation position number	14
Different voltage numbers	14
Set position ●	8

Display position	1	2	3	4	5	6	7	8	9	10	11	12	13	14
Contact position	1	2	3	4	5	6	7	8	9	10	11	12	13	14

- Drawing is shown at the set position

Appendix 49. SHZV (10051W) operating position table and connection diagram

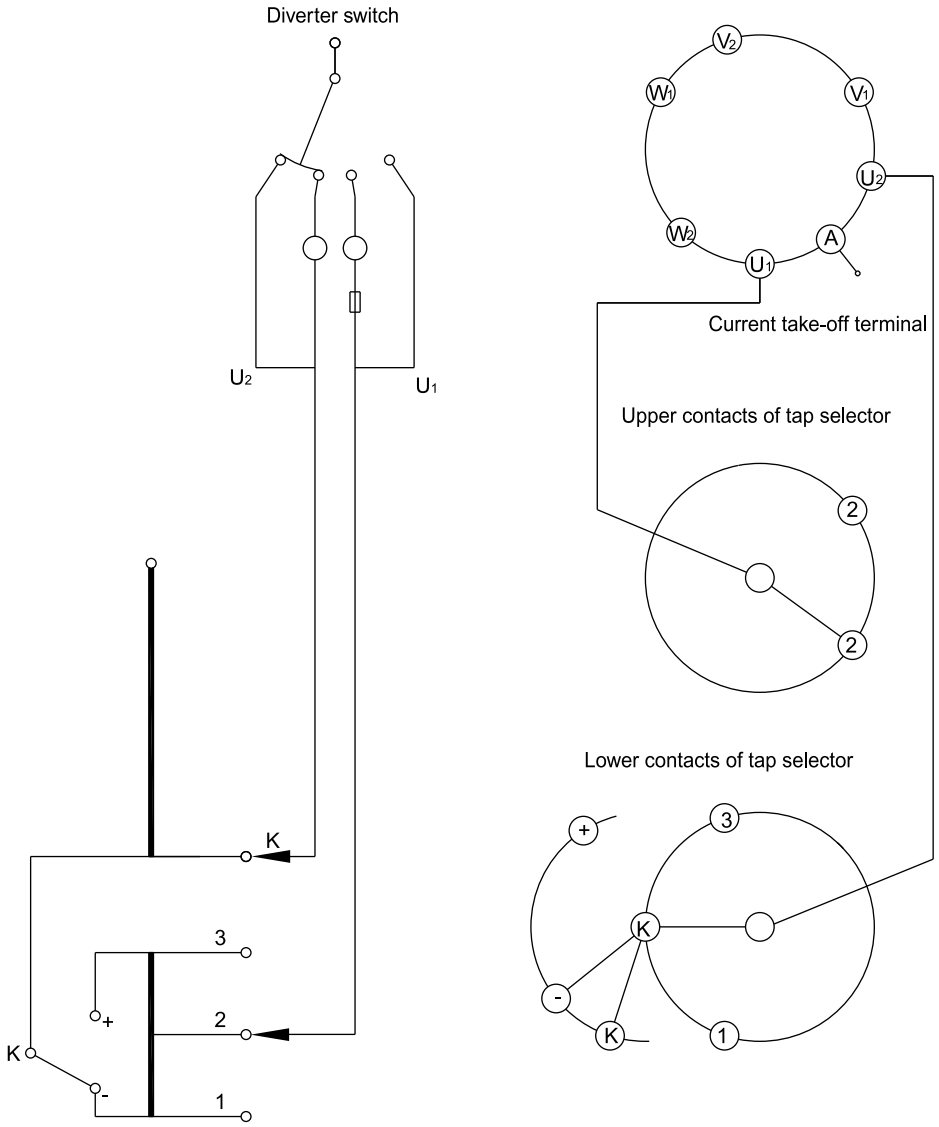

Please connect terminal 1 and "- " , 3 and "+" , 2 and 2 in the same phase.

Operation position number	5
Different voltage number	5
Set position ●	3

Change-over selector	← K+			K - →	
Change-over selector location	1	2	K	2	3
Display position	1	2	3	4	5

● ←

● Drawing is shown at the set position

Appendix 50. SHZV (10071W) operating position table and connection diagram

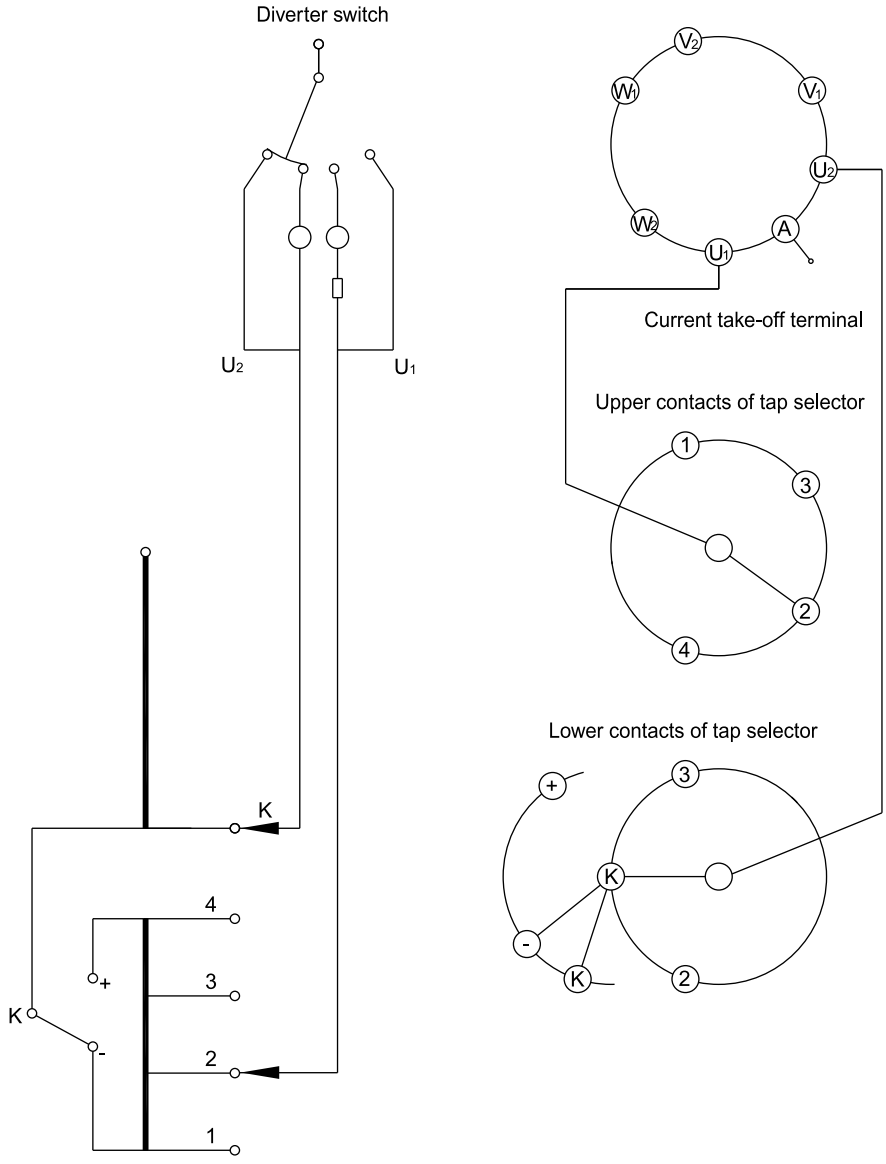

Please connect terminal 1 and "-", 4 and "+", 2 and 2, 3 and 3 in the same phase.

Operation position number	7
Different voltage number	7
Set position ●	4

Change-over selector	K+				K-		
Change-over selector location	1	2	3	K	2	3	4
Display position	1	2	3	4	5	6	7

●

● Drawing is shown at the set position

Appendix 51. SHZV (10091W) operating position table and connection diagram

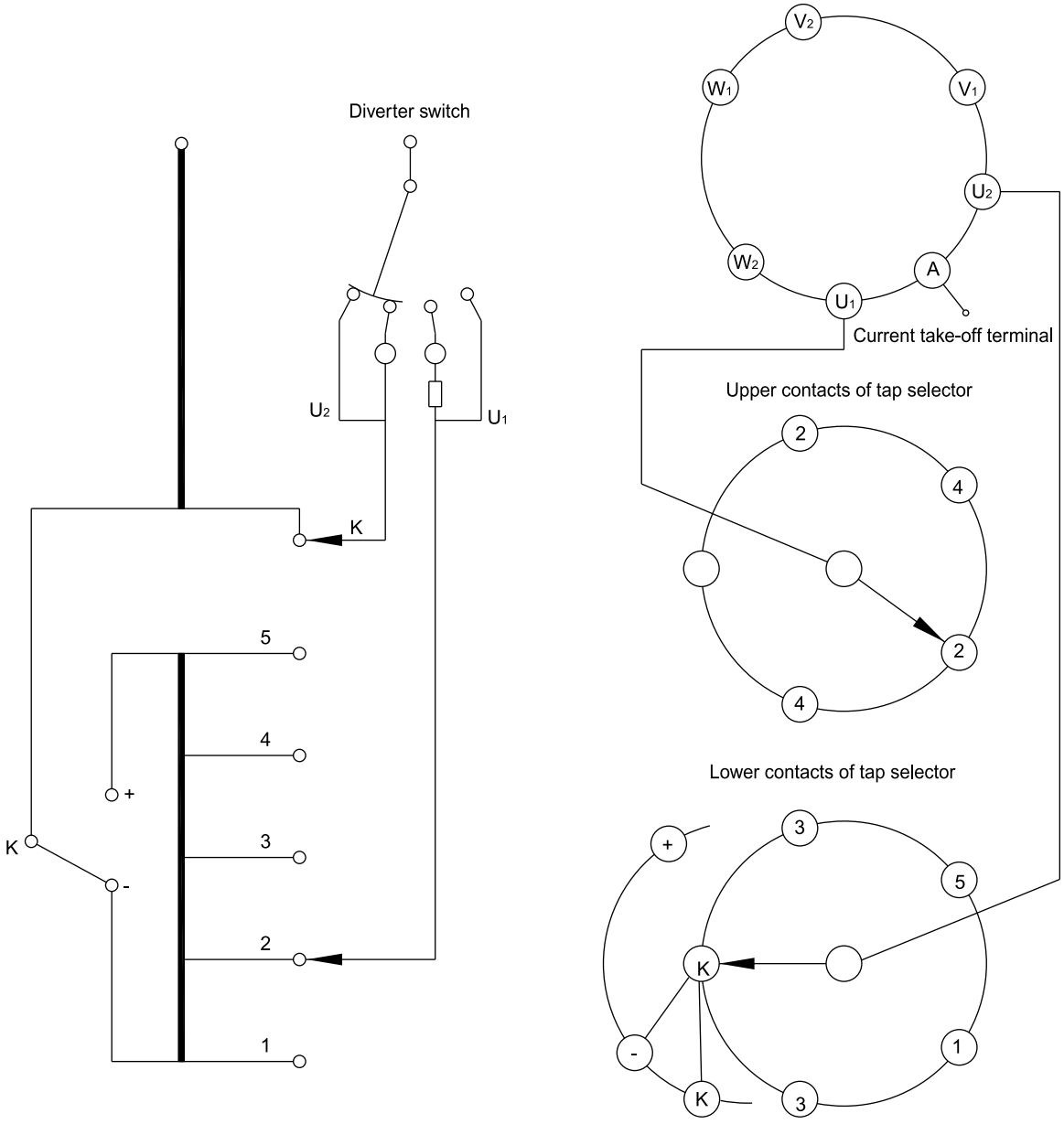

Please connect terminal 1 and "-", 5 and "+",2 and 2, 3 and 3, 4 and 4 in the same phase.

Operation position number	9
Different voltage number	9
Set position ●	5

Change-over selector	← K+ →				← K- →				
Change-over selector location	1	2	3	4	K	2	3	4	5
Display position	1	2	3	4	5	6	7	8	9
					● ←				

● Drawing is shown at the set position

Appendix 52. SHZV (10191W) operating position table and connection diagram

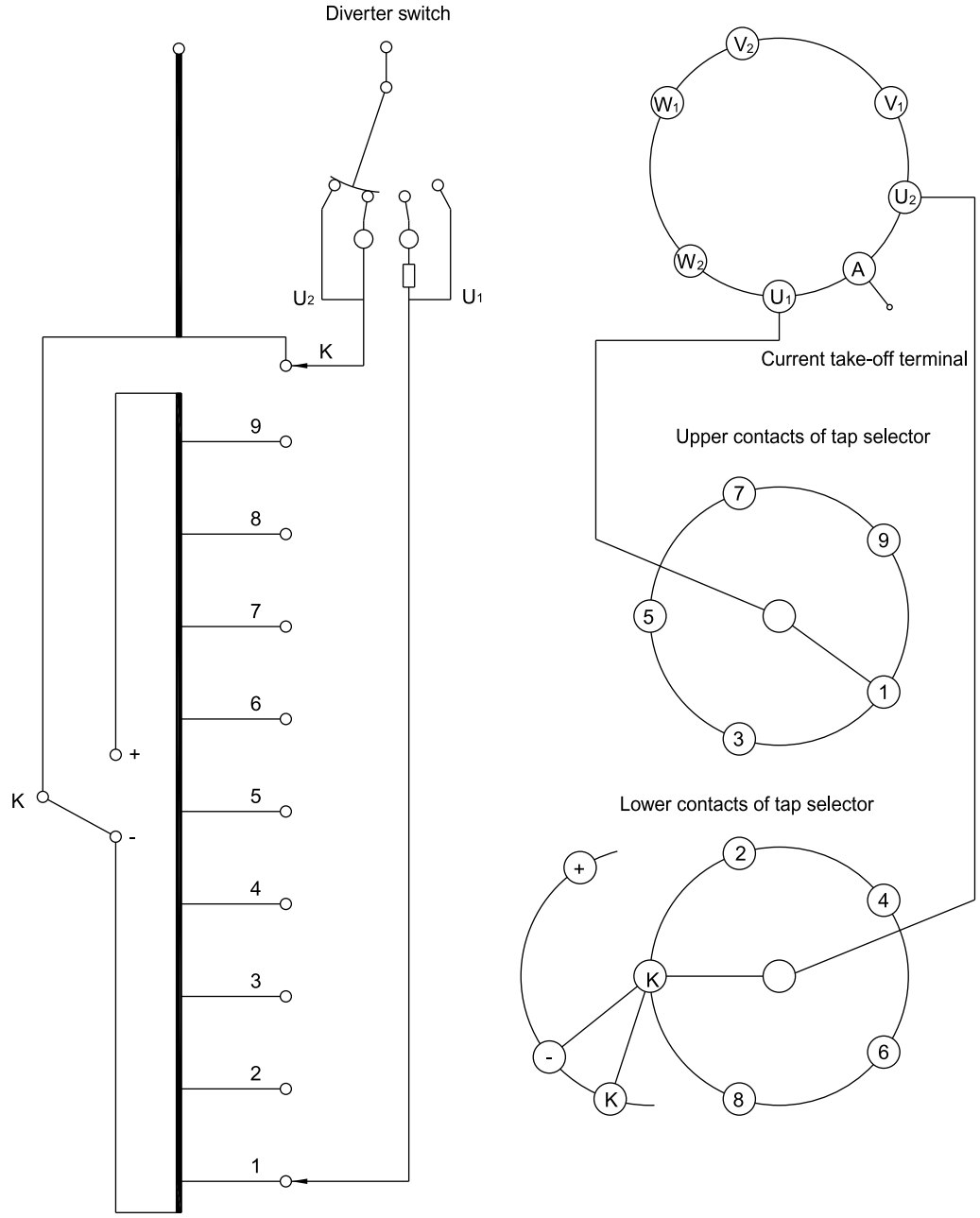

Operation position number	19
Different voltage number	19
Set position ●	10

Change-over selector	← K+										← K-								
Change-over selector location	1	2	3	4	5	6	7	8	9	K	1	2	3	4	5	6	7	8	9
Display position	1	2	3	4	5	6	7	8	9	10	11	12	13	14	15	16	17	18	19

● Drawing is shown at the set position

Appendix 53. SHZV (10191G) operating position table and connection diagram

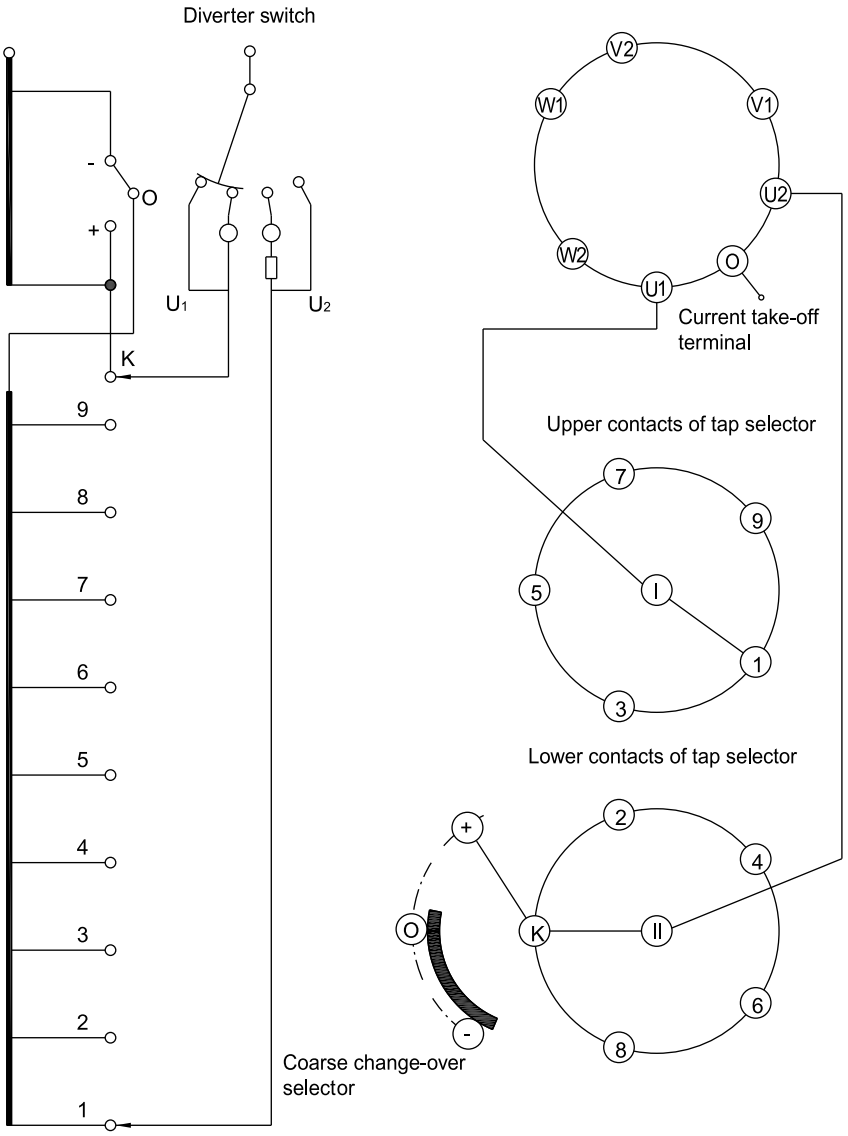

Operation position number	19
Different voltage number	19
Set position ●	10

Change-over selector	← O+ →										← O - →								
Change-over selector location	1	2	3	4	5	6	7	8	9	K	1	2	3	4	5	6	7	8	9
Display position	1	2	3	4	5	6	7	8	9	10	11	12	13	14	15	16	17	18	19

● ←

● Drawing is shown at the set position

Appendix 54. SHZV (10193W) operating position table and connection diagram

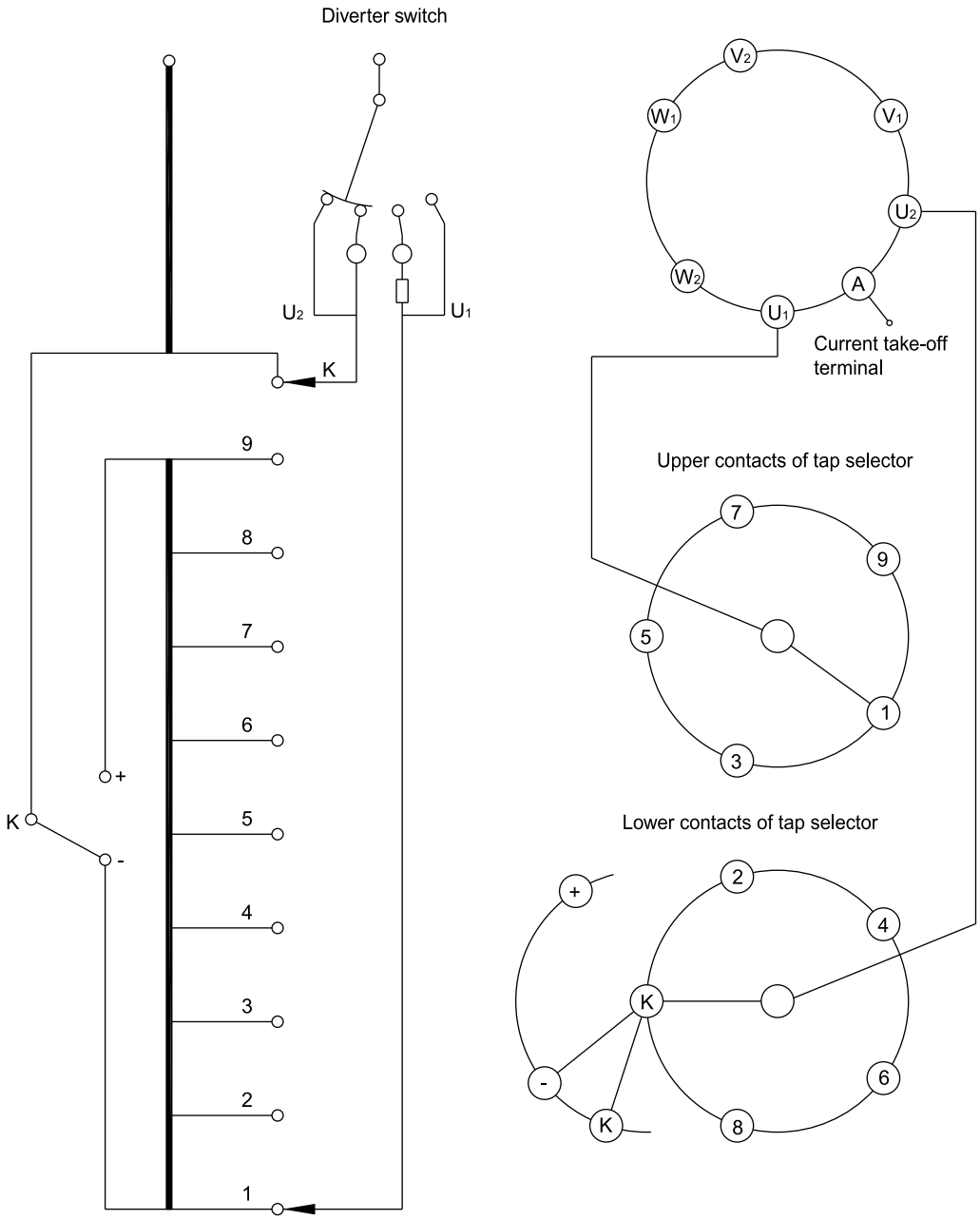

Operation position number	19
Different voltage number	17
Set position ●	9b

Please connect terminal 1 and "-", 9 and "+" in the same phase.

Change-over selector	K+										K-								
Change-over selector location	1	2	3	4	5	6	7	8	9	K	1	2	3	4	5	6	7	8	9
Display position	1	2	3	4	5	6	7	8	9a	9b	9c	10	11	12	13	14	15	16	17

● Drawing is shown at the set position

Appendix 55. SHZV (10193G) operating position table and connection diagram

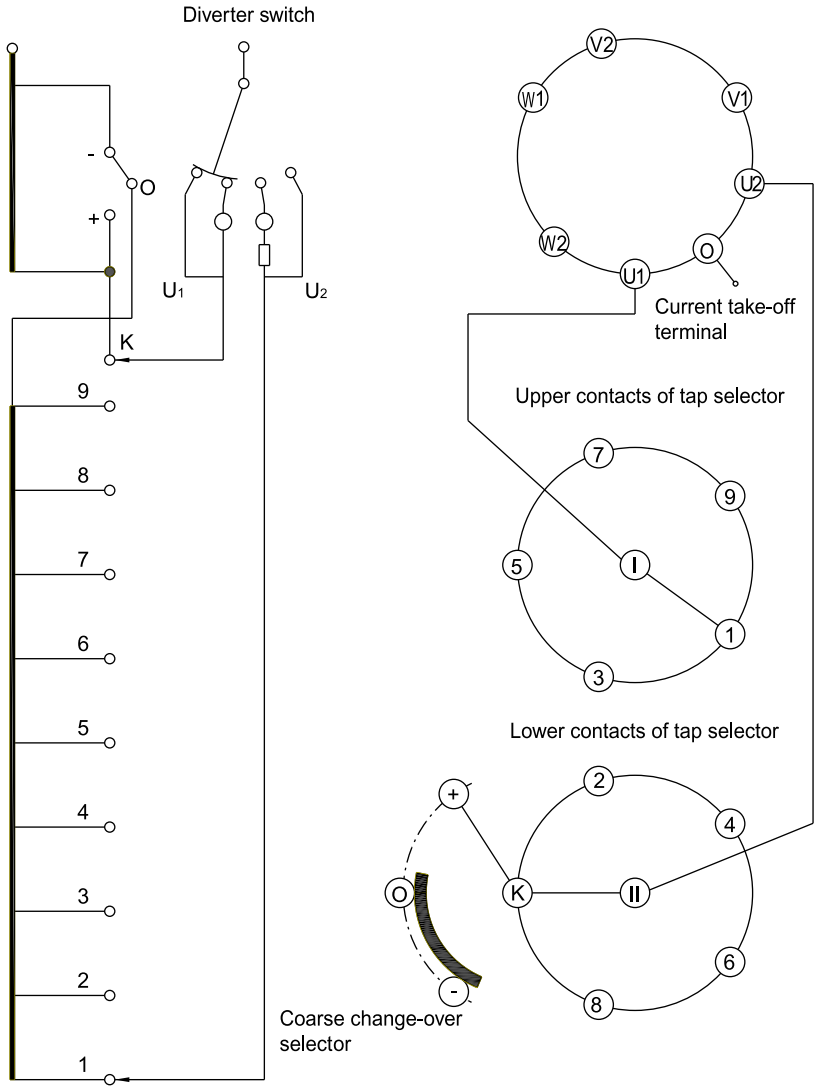

Operation position number	19
Different voltage number	17
Set position ●	9b

Change-over selector	← O+ →										← O- →								
Change-over selector location	1	2	3	4	5	6	7	8	9	K	1	2	3	4	5	6	7	8	9
Display position	1	2	3	4	5	6	7	8	9a	9b	9c	10	11	12	13	14	15	16	17

● Drawing is shown at the set position

Appendix 56. SHZV (12111W) operating position table and connection diagram

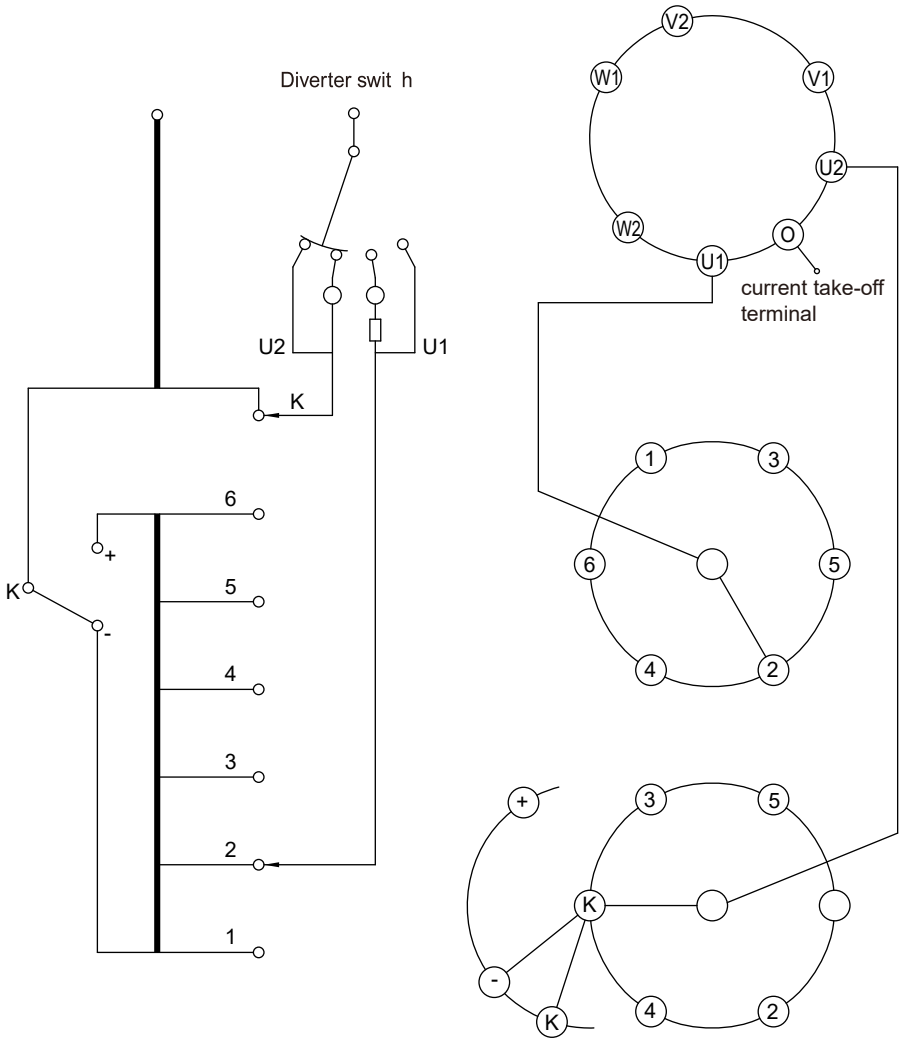

Pleasa connect terminal 1 and “-”, 6 and “+” 3 and 3, 4 and 4, 5 and 5 in the same phase

Operation position number	11
Different voltage number	11
Set position ●	6

Change-over selector	K+						K-				
Operation position	1	2	3	4	5	6	7	8	9	10	11
Change-over selector location	1	2	3	4	5	K	2	3	4	5	6
Display position	1	2	3	4	5	6	7	8	9	10	11

● Drawing is shown at the set position

Appendix 57. SHZV (12231W) operating position table and connection diagram

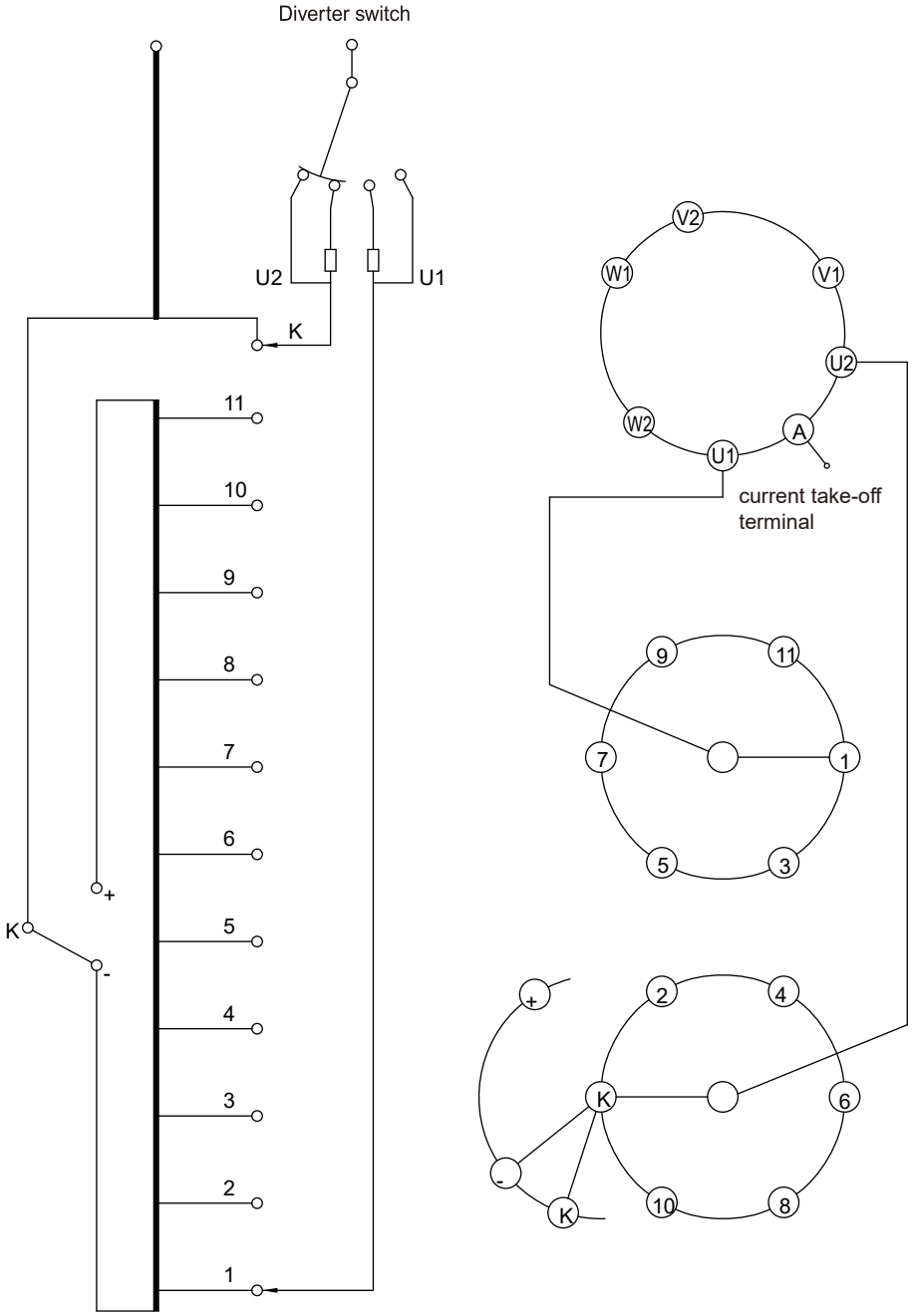

Operation position number	23
Different voltage number	23
Set position ●	12

Change-over selector	K+											K-											
Operation position	1	2	3	4	5	6	7	8	9	10	11	12	13	14	15	16	17	18	19	20	21	22	23
Change-over selector location	1	2	3	4	5	6	7	8	9	10	11	K	1	2	3	4	5	6	7	8	9	10	11
Display position	1	2	3	4	5	6	7	8	9	10	11	12	13	14	15	16	17	18	19	20	21	22	23

● Drawing is shown at the set position

Appendix 58. SHZV (12231G) operating position table and connection diagram

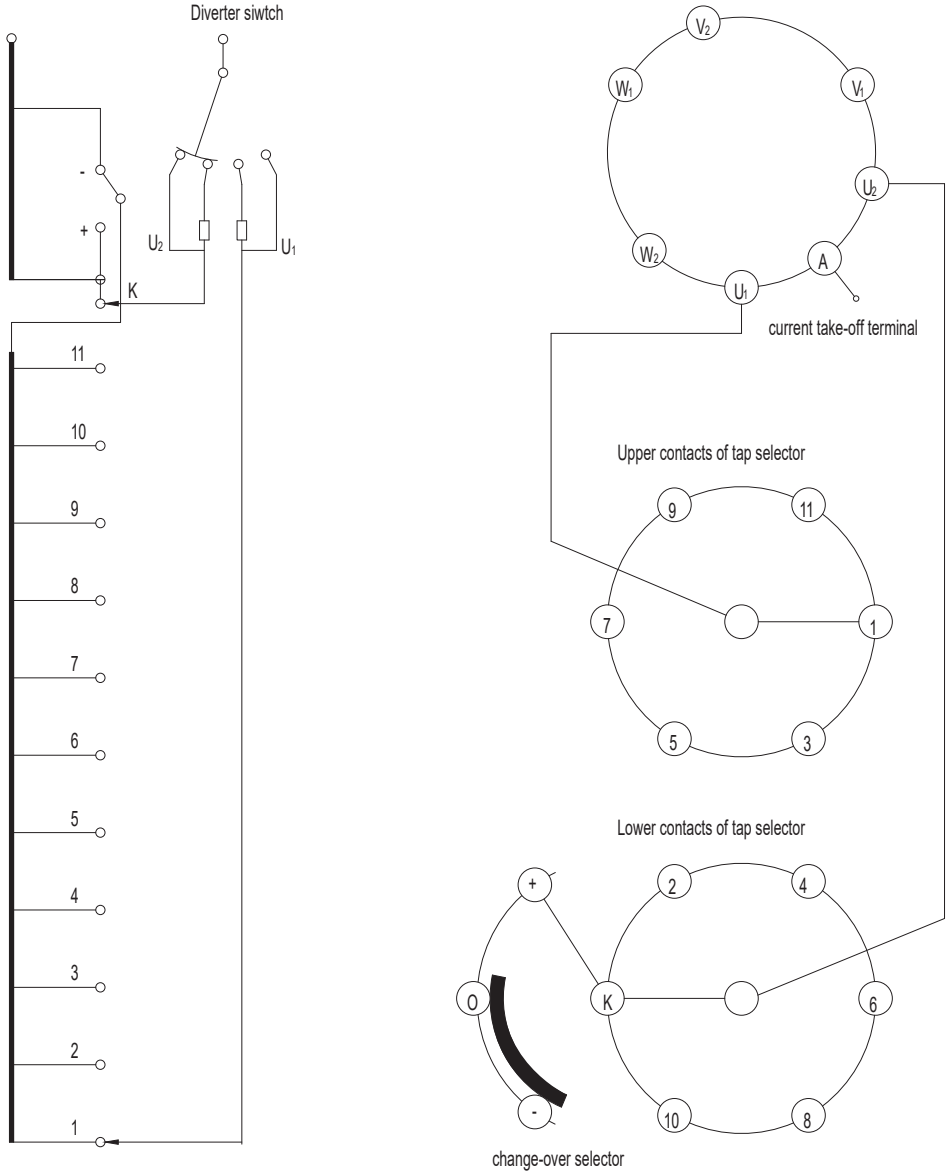

Operation position number	23
Different voltage numbers	23
Set position ●	12

change-over selector	K+											K-											
tap-changer position	1	2	3	4	5	6	7	8	9	10	11	12	13	14	15	16	17	18	19	20	21	22	23
Contact position	1	2	3	4	5	6	7	8	9	10	11	K	1	2	3	4	5	6	7	8	9	10	11
Display position	1	2	3	4	5	6	7	8	9	10	11	12	13	14	15	16	17	18	19	20	21	22	23

- Drawing is shown at the set position

Appendix 59. SHZV (12233W) operating position table and connection diagram

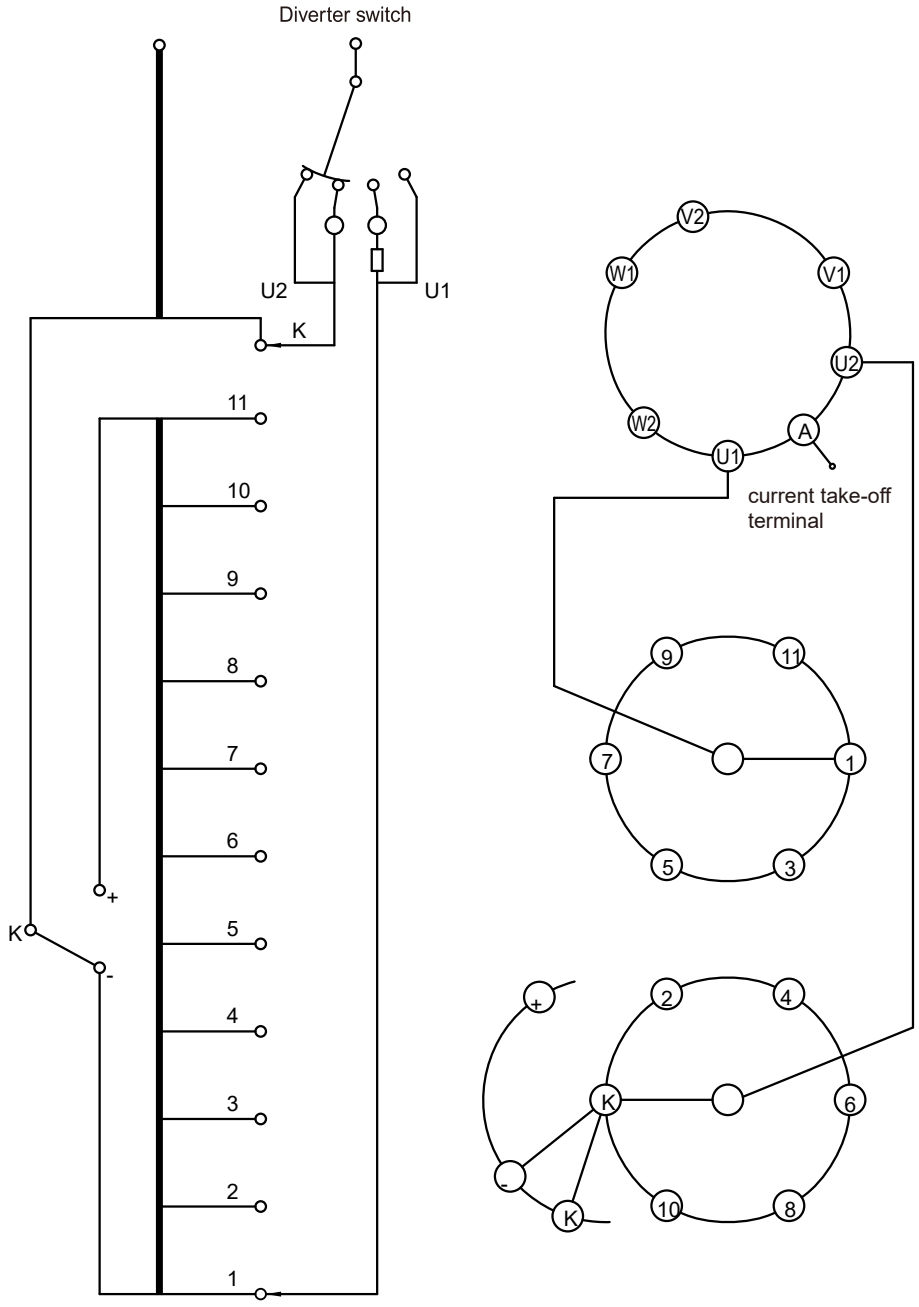

Please connect terminal 1 and “-”, 11 and “+” in the same phase

Operation position number	23
Different voltage number	21
Set position ●	11b

Change-over selector	K+											K-											
Operation position	1	2	3	4	5	6	7	8	9	10	11	12	13	14	15	16	17	18	19	20	21	22	23
Change-over selector location	1	2	3	4	5	6	7	8	9	10	11	K	1	2	3	4	5	6	7	8	9	10	11
Display position	1	2	3	4	5	6	7	8	9	10	11a	11b	11c	12	13	14	15	16	17	18	19	20	21

● Drawing is shown at the set position

Appendix 60. SHZV (14131W) operating position table and connection diagram

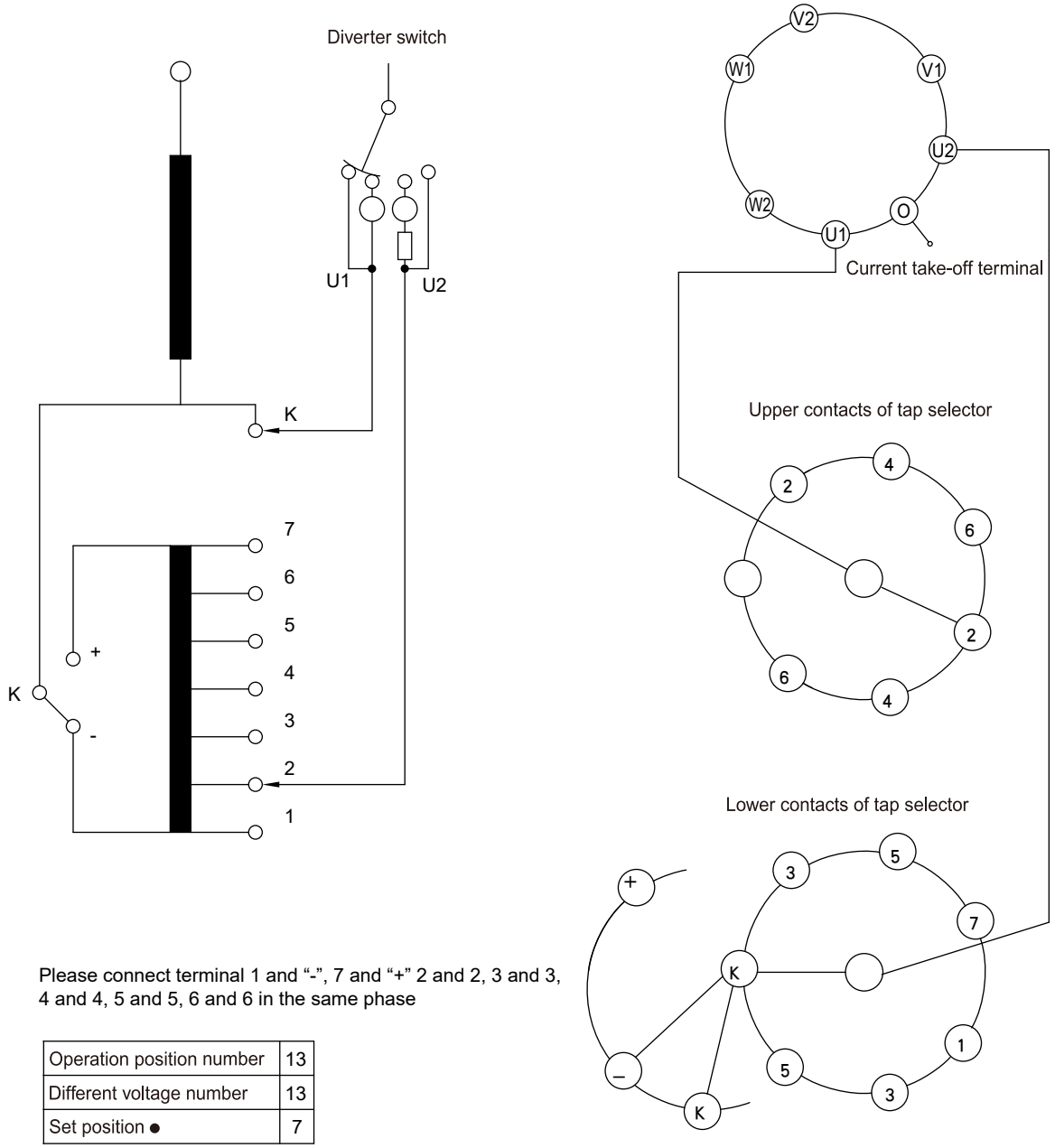

Please connect terminal 1 and "-", 7 and "+" 2 and 2, 3 and 3, 4 and 4, 5 and 5, 6 and 6 in the same phase

Operation position number	13
Different voltage number	13
Set position ●	7

Change-over selector	K+							K-					
Operation position	1	2	3	4	5	6	7	8	9	10	11	12	13
Change-over selector location	1	2	3	4	5	6	K	2	3	4	5	6	7
Display position	1	2	3	4	5	6	7	8	9	10	11	12	13

● Drawing is shown at the set position

Appendix 61. SHZV (14271W) operating position table and connection diagram

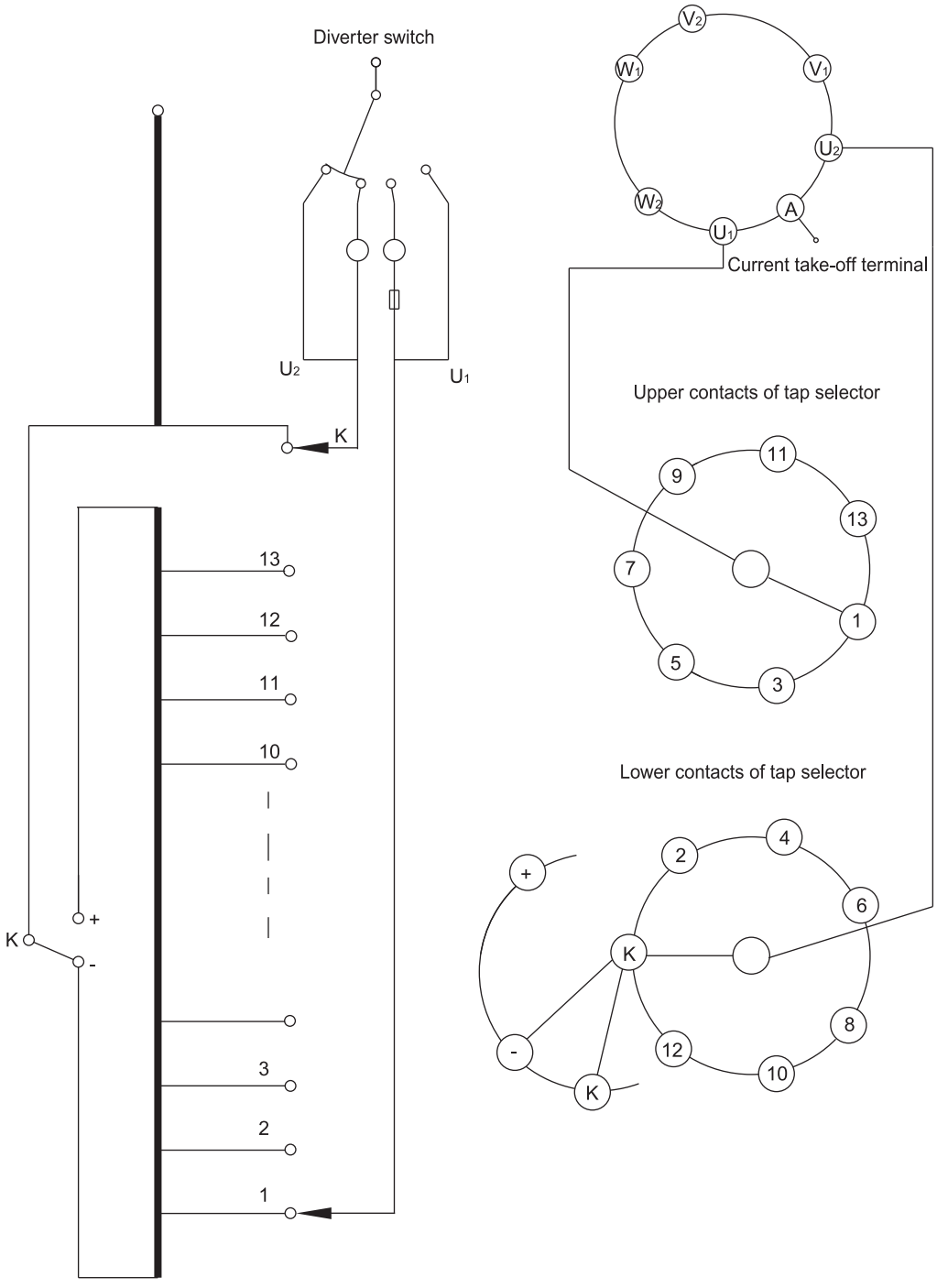

Operation position number	27
Different voltage number	27
Set position ●	14

Change-over selector	← K+ →													← K- →												
Change-over selector location	1	2	3	4	5	6	7	8	9	10	11	12	13	K	1	2	3	4	5	6	7	8	9	10	11	12	13
Display position	1	2	3	4	5	6	7	8	9	10	11	12	13	14	15	16	17	18	19	20	21	22	23	24	25	26	27

● ←

● Drawing is shown at the set position

Appendix 62. SHZV (14273W) operating position table and connection diagram

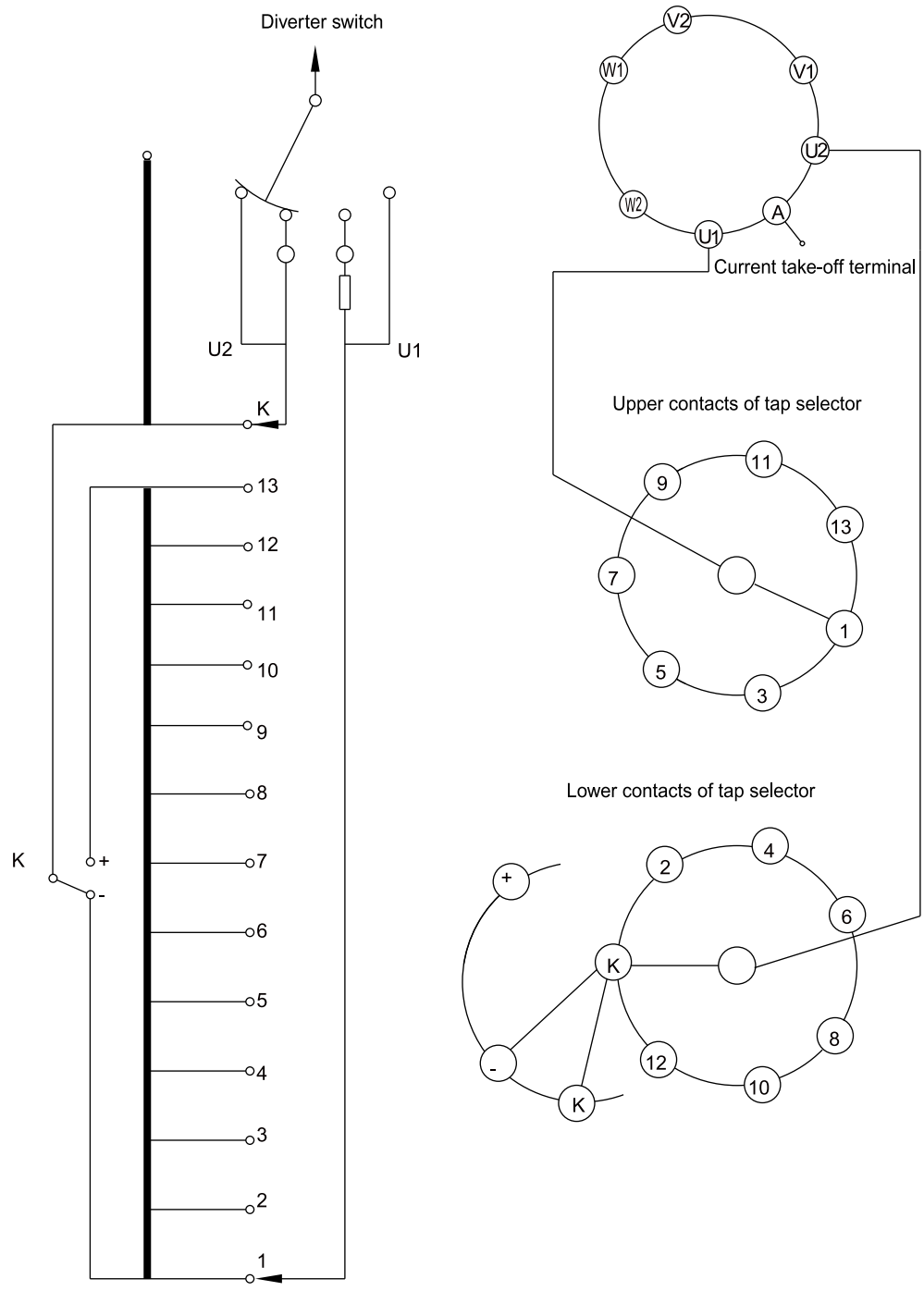

Operation position number	27
Different voltage number	25
Set position ●	13b

Please connect terminal 1 and "-" , 13 and "+" in the same phase.

Change-over selector	K+													K-												
Change-over selector location	1	2	3	4	5	6	7	8	9	10	11	12	13	K	1	2	3	4	5	6	7	8	9	10	11	12	13
Display position	1	2	3	4	5	6	7	8	9	10	11	12	13a	13b	13c	14	15	16	17	18	19	20	21	22	23	24	25

● Drawing is shown at the set position

Appendix 63. SHZV (18351W) operating position table and connection diagram

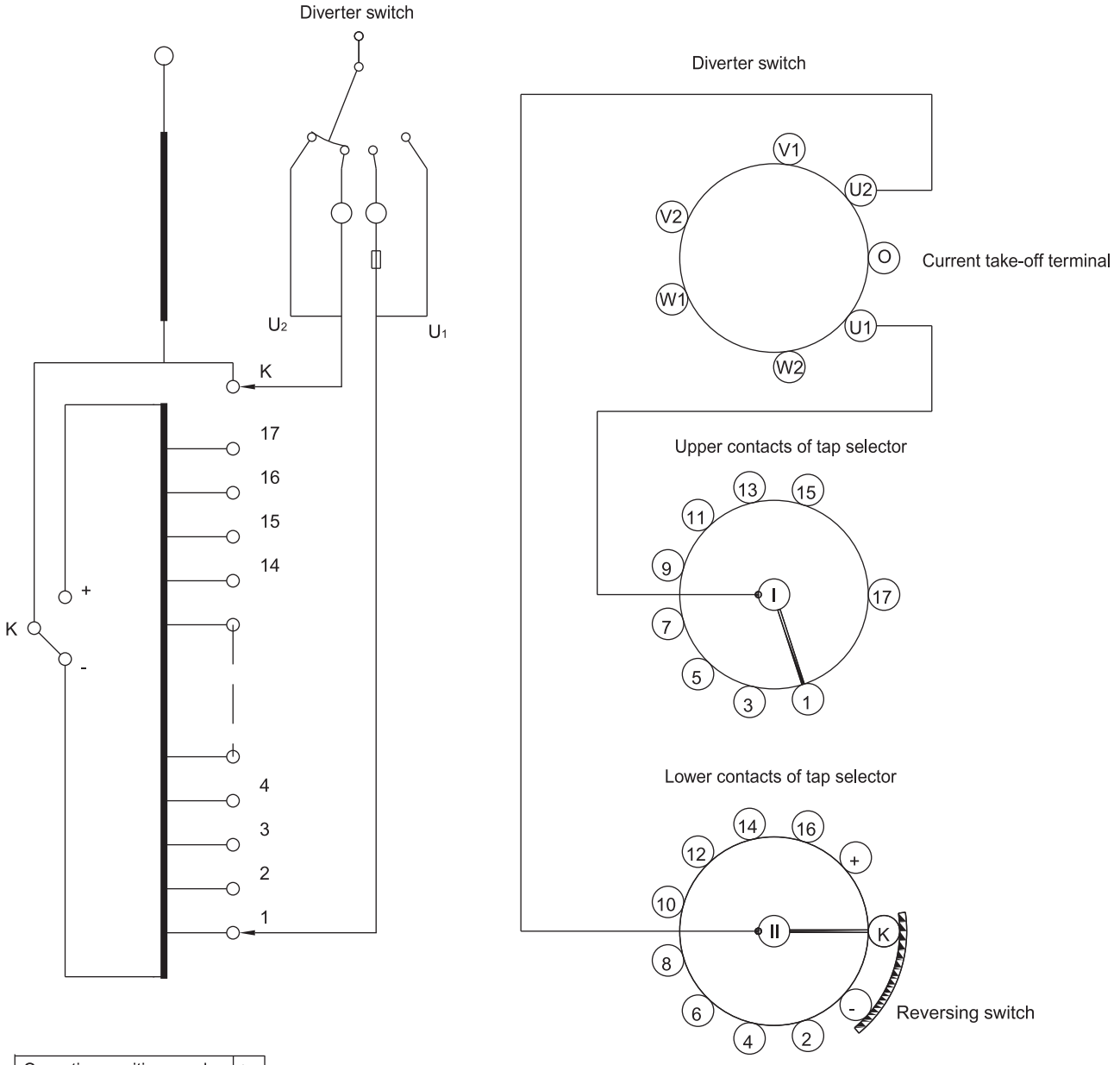

Operation position number	35
Different voltage number	35
Set position ●	18

Change-over selector	K+																K-																
Change-over selector location	1	2	3	4	5	6	7	8	9	10	11	12	13	14	15	16	17	k	1	2	3	4	5	6	7	8	9	10	11	12	13	14	15	16	17
Display position	1	2	3	4	5	6	7	8	9	10	11	12	13	14	15	16	17	18	19	20	21	22	23	24	25	26	27	28	29	30	31	32	33	34	35

Note: It is suitable for cage tap selector structure only ● ←

● Drawing is shown at the set position

Appendix 64. SHZV (18351G) operating position table and connection diagram

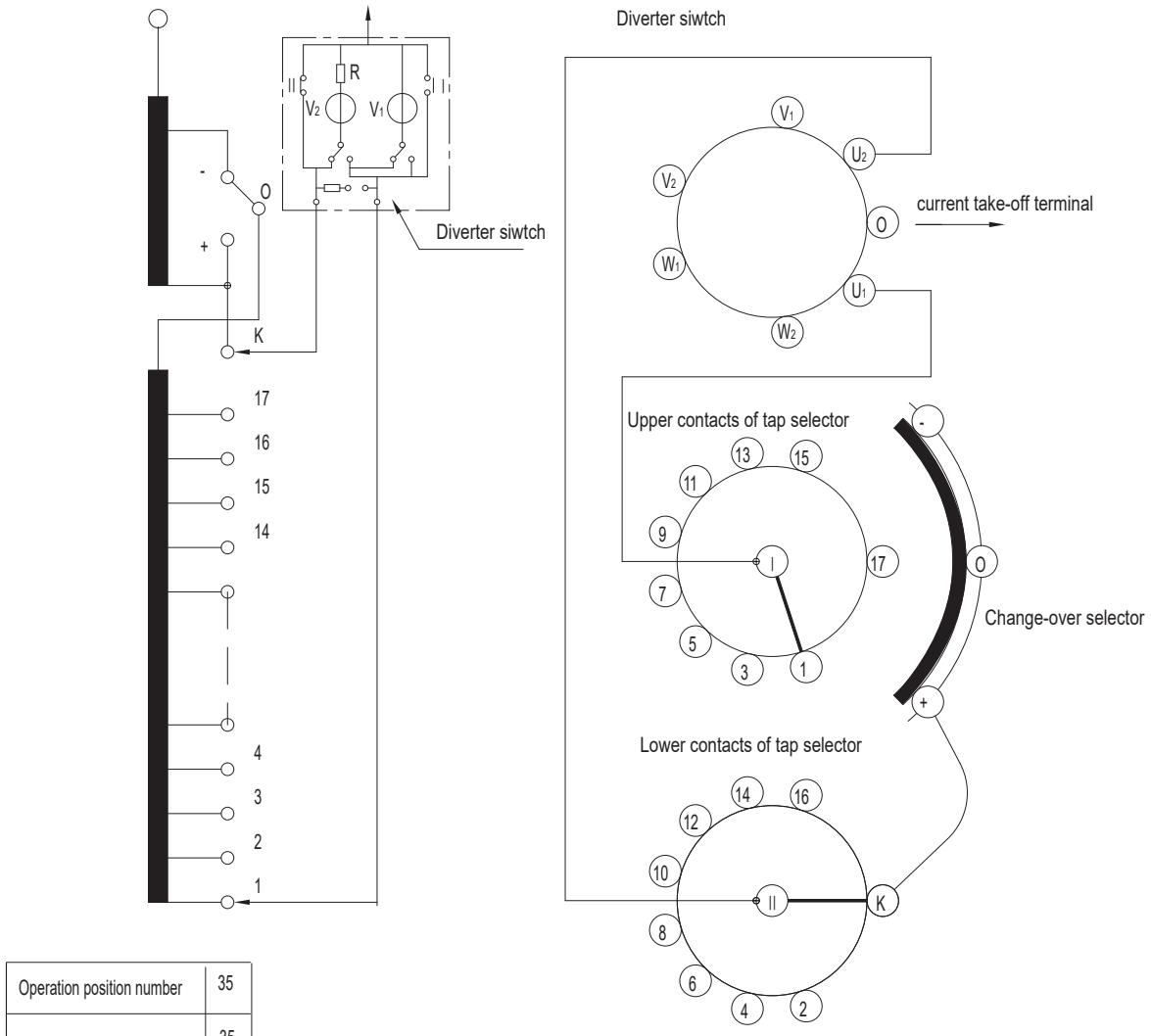

Operation position number	35
Different voltage numbers	35
Set position ●	18

Change-over selector	← O+ →																	← O- →																
Tap-changer position	1	2	3	4	5	6	7	8	9	10	11	12	13	14	15	16	17	18	19	20	21	22	23	24	25	26	27	28	29	30	31	32	33	34	35
Contact position	1	2	3	4	5	6	7	8	9	10	11	12	13	14	15	16	17	k	1	2	3	4	5	6	7	8	9	10	11	12	13	14	15	16	17
Display position	1	2	3	4	5	6	7	8	9	10	11	12	13	14	15	16	17	18	19	20	21	22	23	24	25	26	27	28	29	30	31	32	33	34	35

⊖ ←

- Drawing is shown at the set position

Appendix 65. SHZV (18353W) operating position table and connection diagram

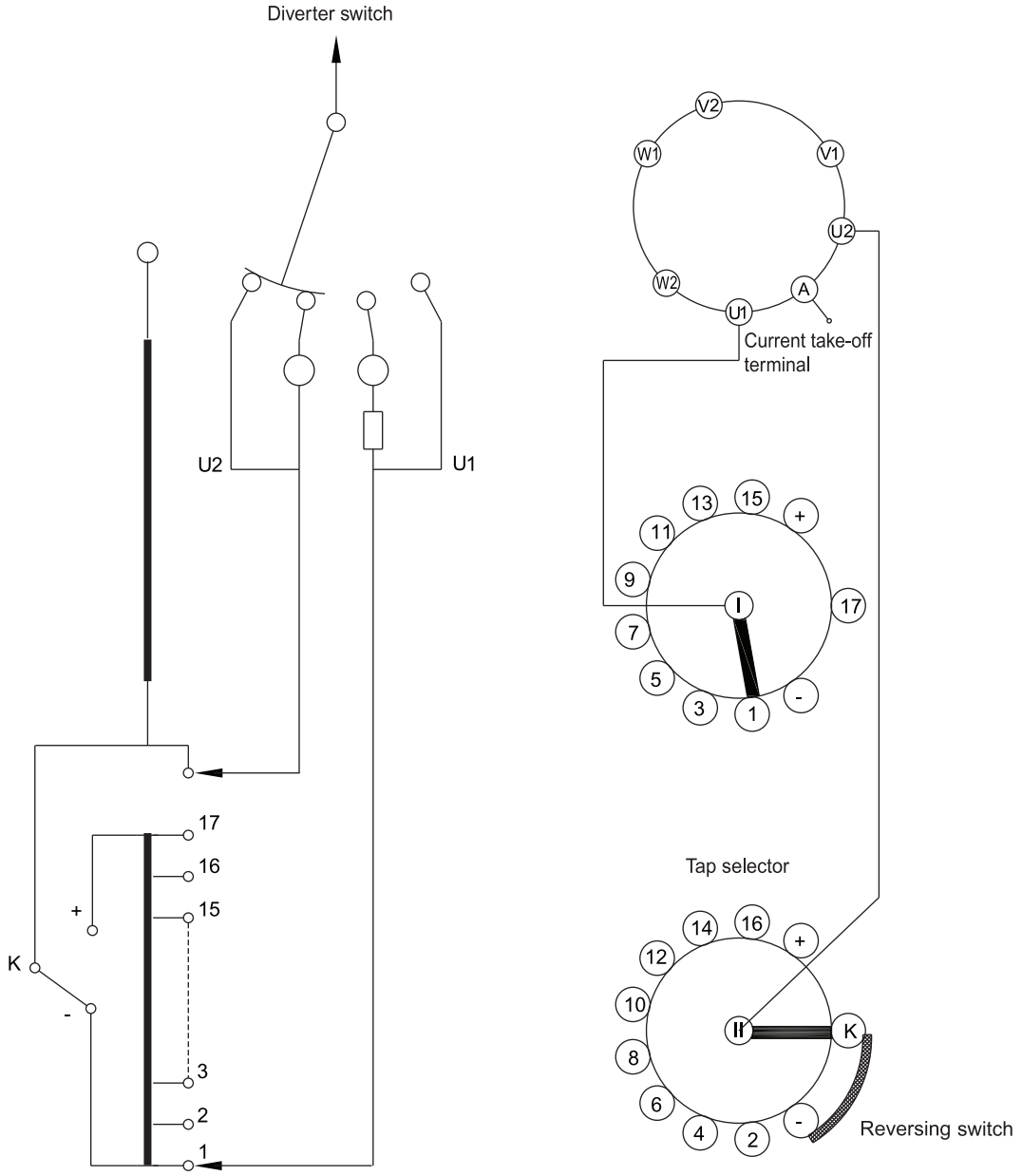

Operation position number	35
Different voltage number	33
Set position ●	17b

Change-over selector	← K+ →																← K- →															
Change-over selector location	1	2	3	4	5	6	7	8	9	10	11	12	13	14	15	16	17	K	1	2	3	4	5	6	7	8	9	10	11	12	13	14	15	16	17
Display position	1	2	3	4	5	6	7	8	9	10	11	12	13	14	15	16	17a	17b	17c	18	19	20	21	22	23	24	25	26	27	28	29	30	31	32	33

Note: It is suitable for cage tap selector structure only ● ←

● Drawing is shown at the set position

Appendix 66 SHZV bell-type head flange, overall dimension, cylinder tap selector

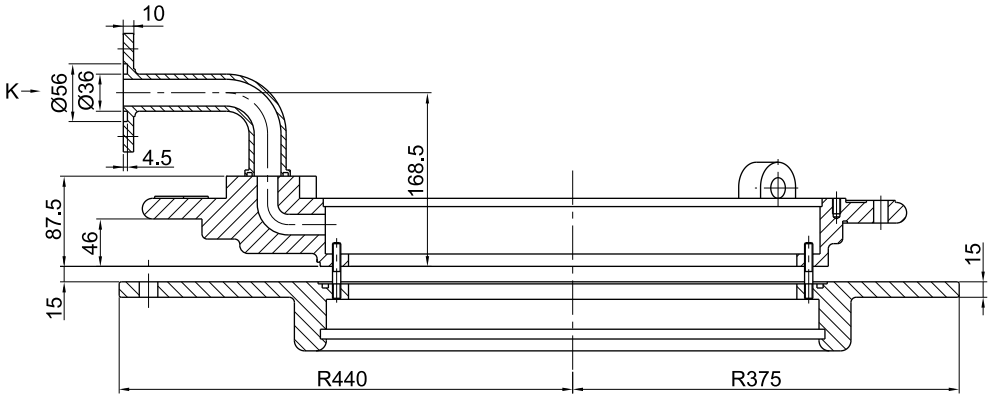

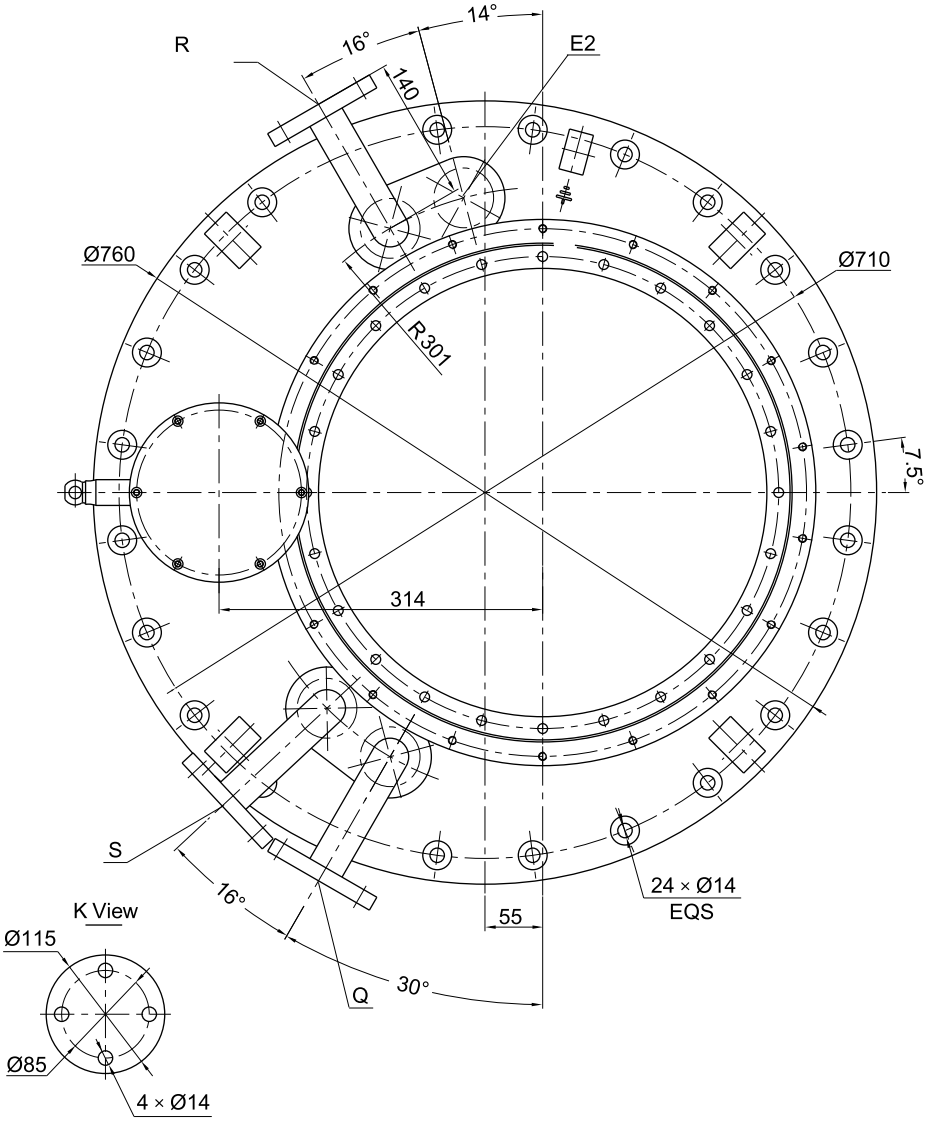

Unit: mm

Appendix 67. SHZV bell-type head flange with pressure relief valve, overall dimension, cylinder tap selector

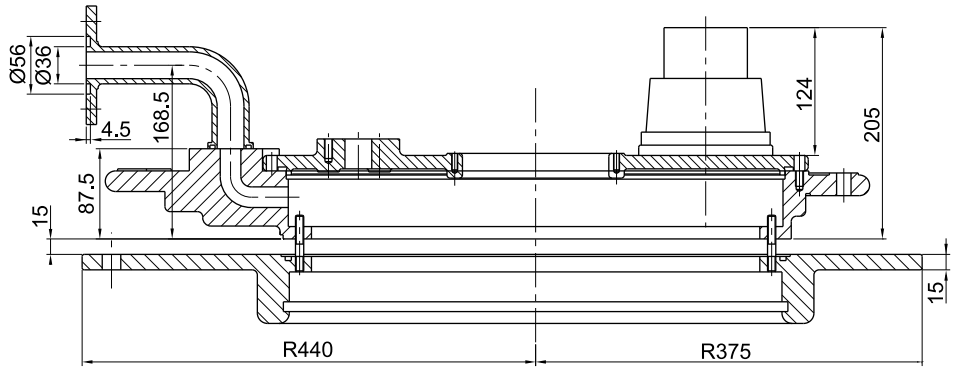

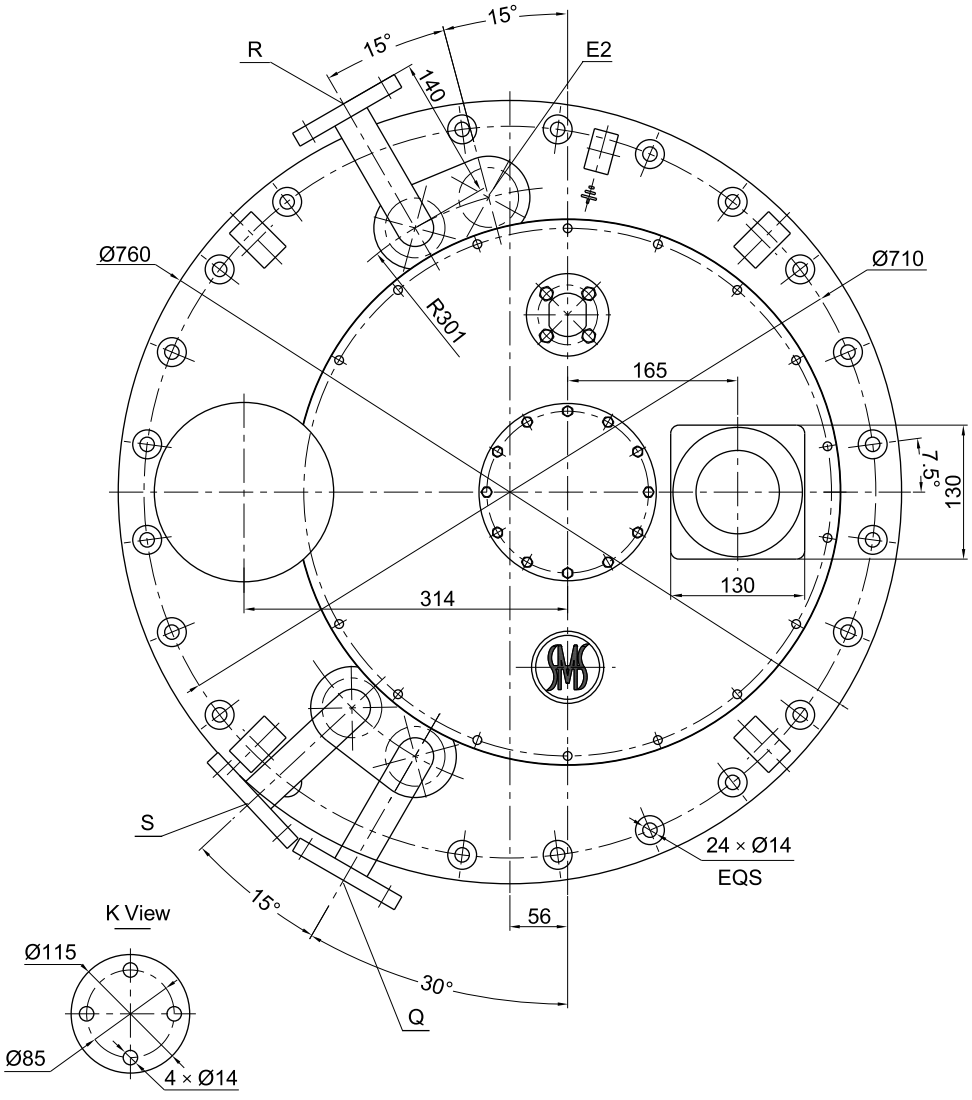

Unit: mm

Appendix 68. SHZV supporting flange, overall dimension, cylinder tap selector

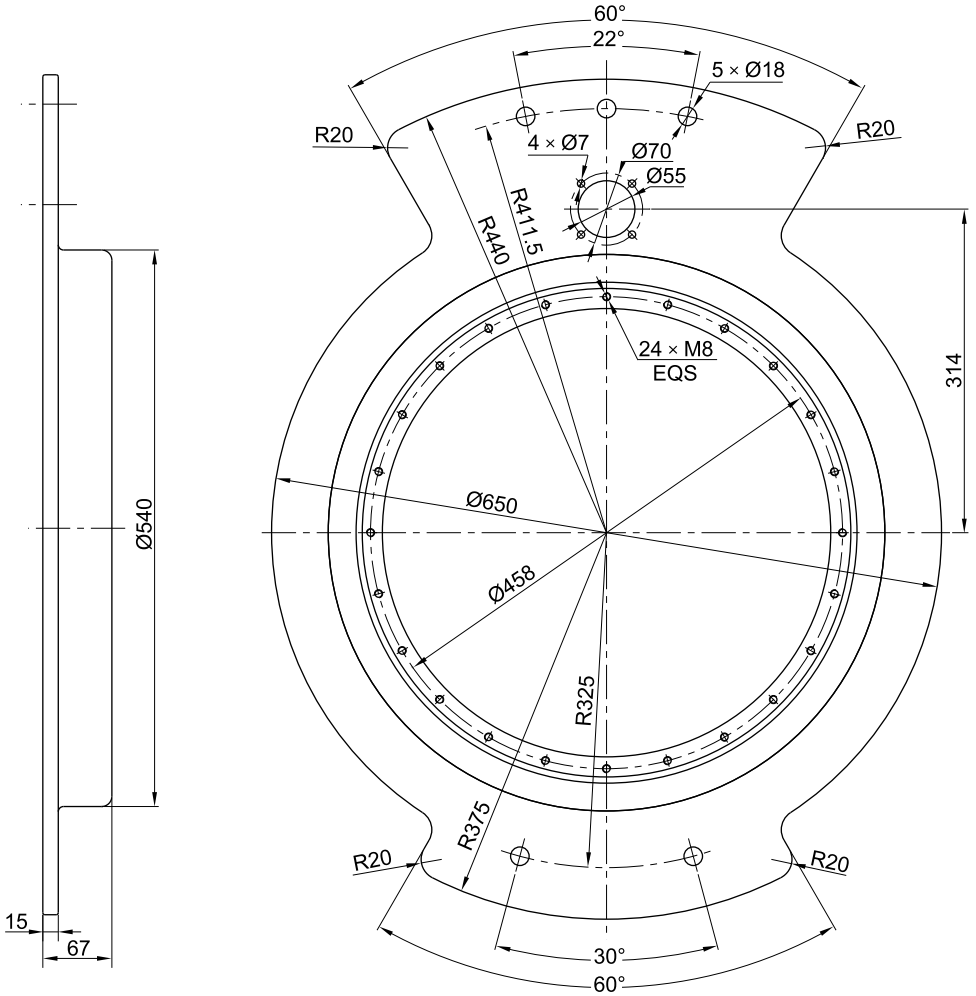

Unit: mm

Appendix 69. Transformer mounting flange for SHZV overall dimension

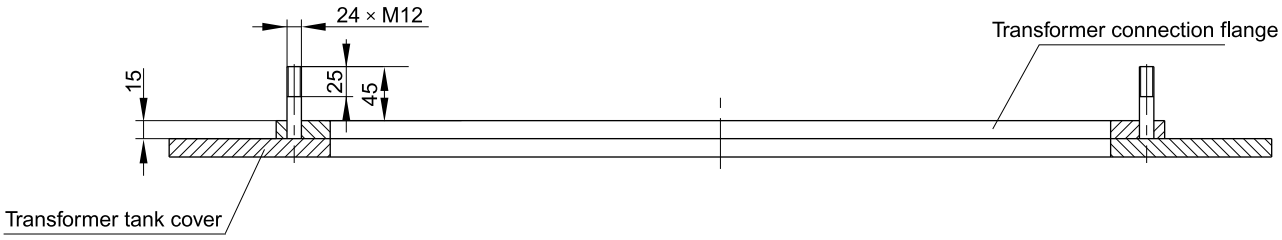

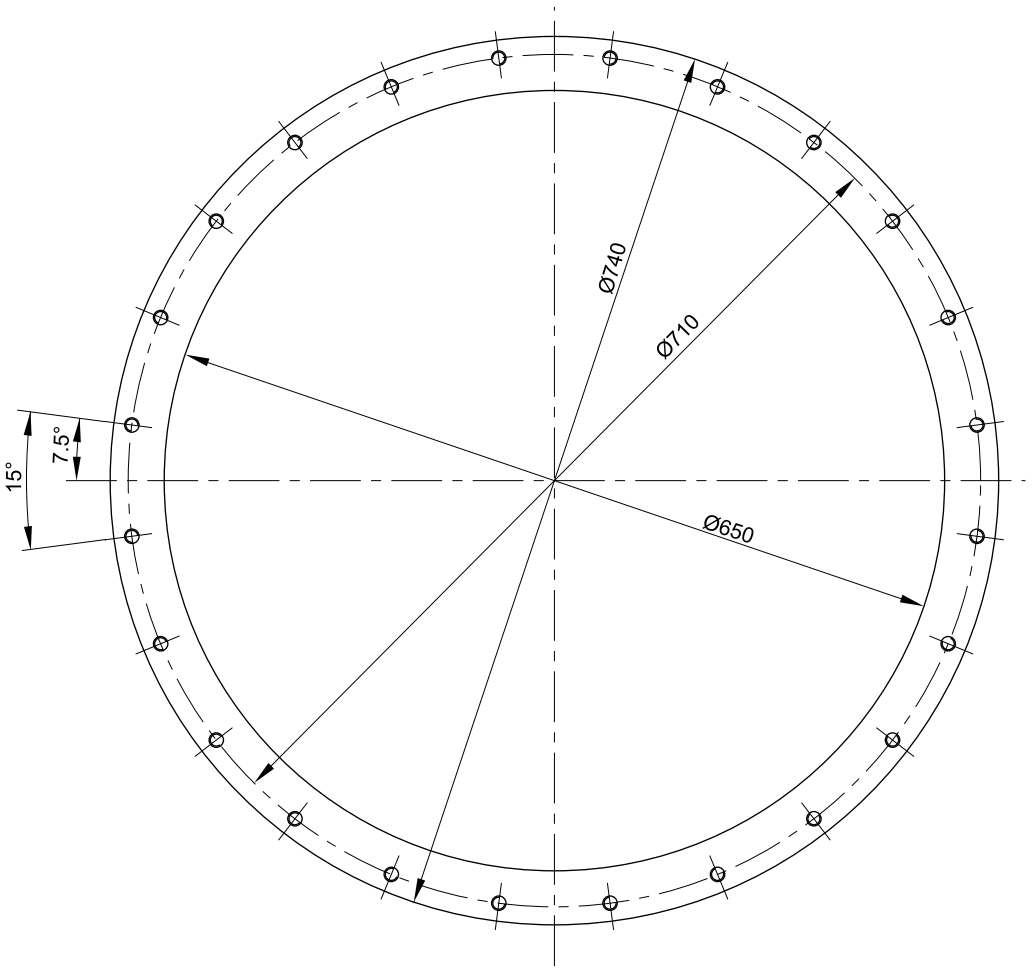

Unit: mm

Appendix 70. By-pass pipe overall dimension

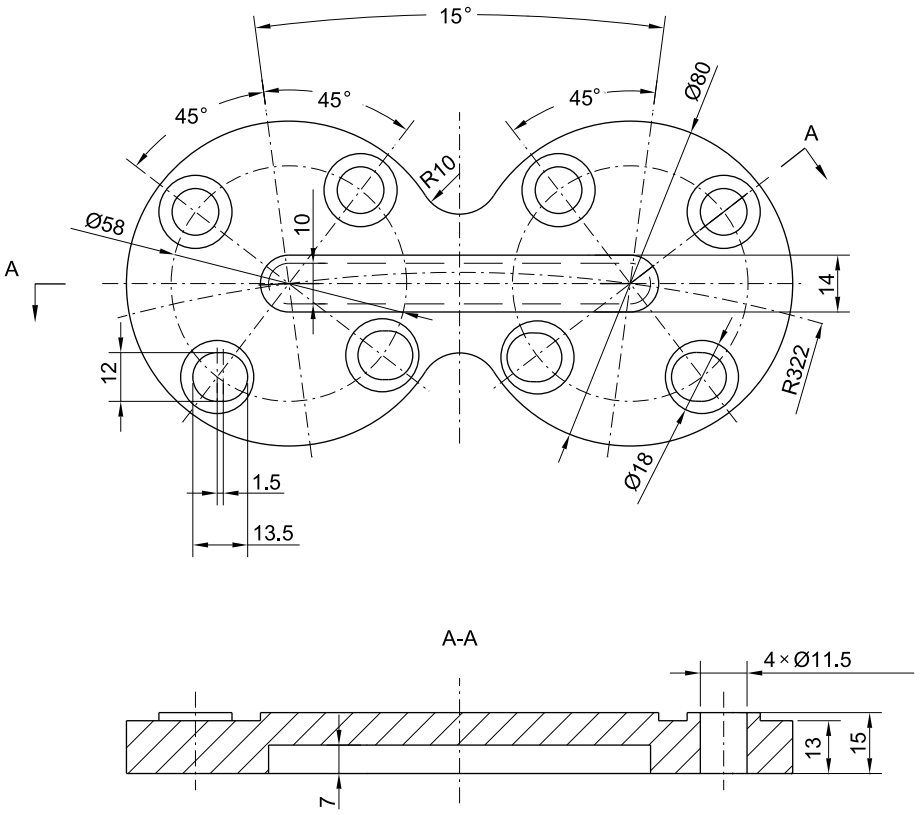

Appendix 71. Bell-type lifting plate ,overall dimension

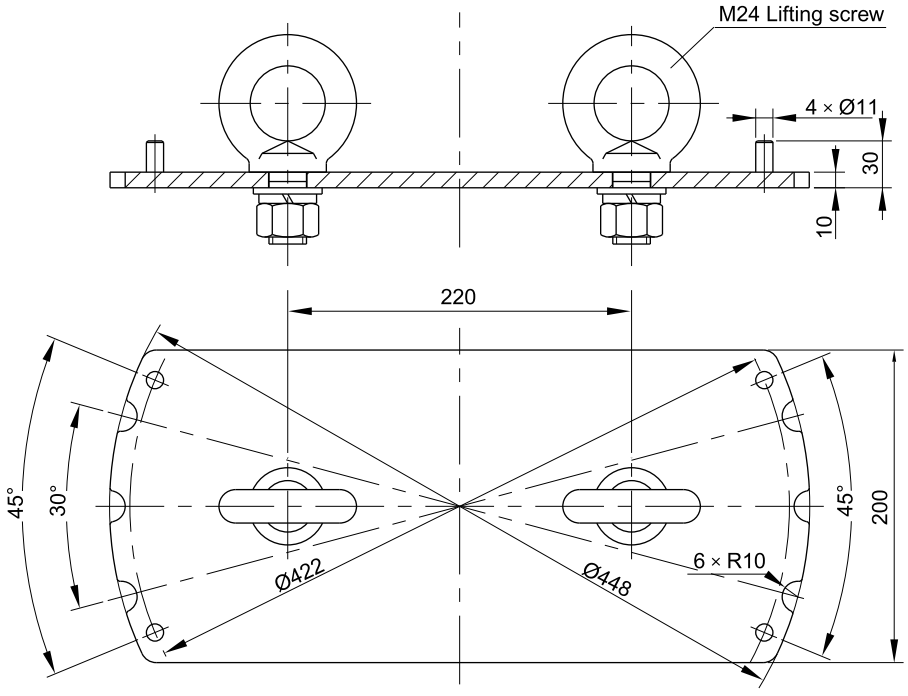

Unit: mm

Appendix 72-1. SHZV OLTC mounted with tie-in-resistoron cylinder overall dimension

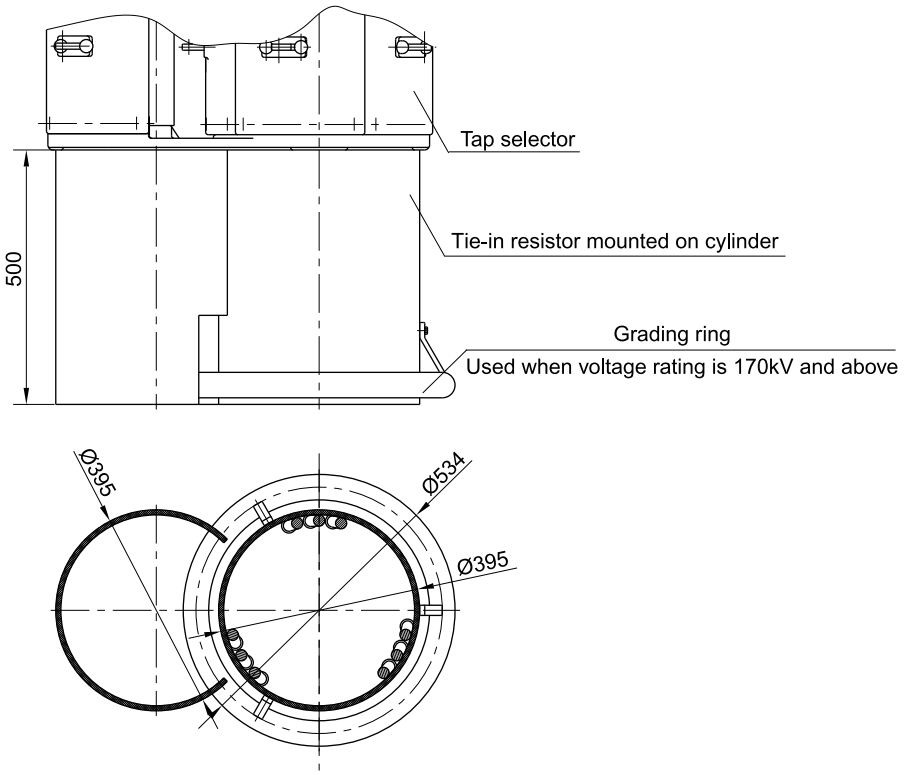

Appendix 72-2. SHZV OLTC mounted with tie-in-resistoron plate overall dimension (cage tap selector)

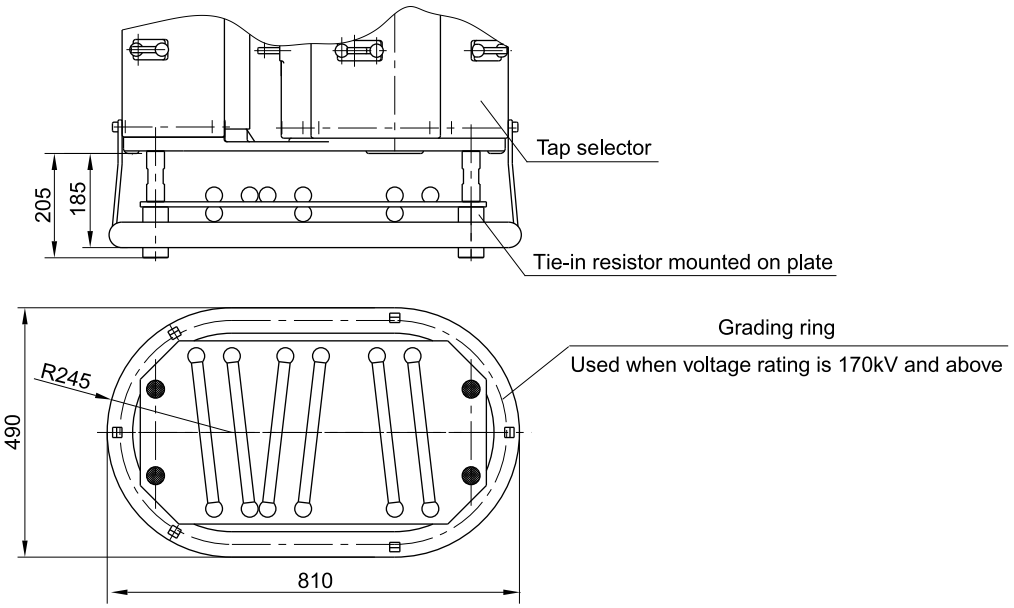

Unit: mm

Appendix 73. Schematic drawing for connecting of horizontal shaft and vertical shaft

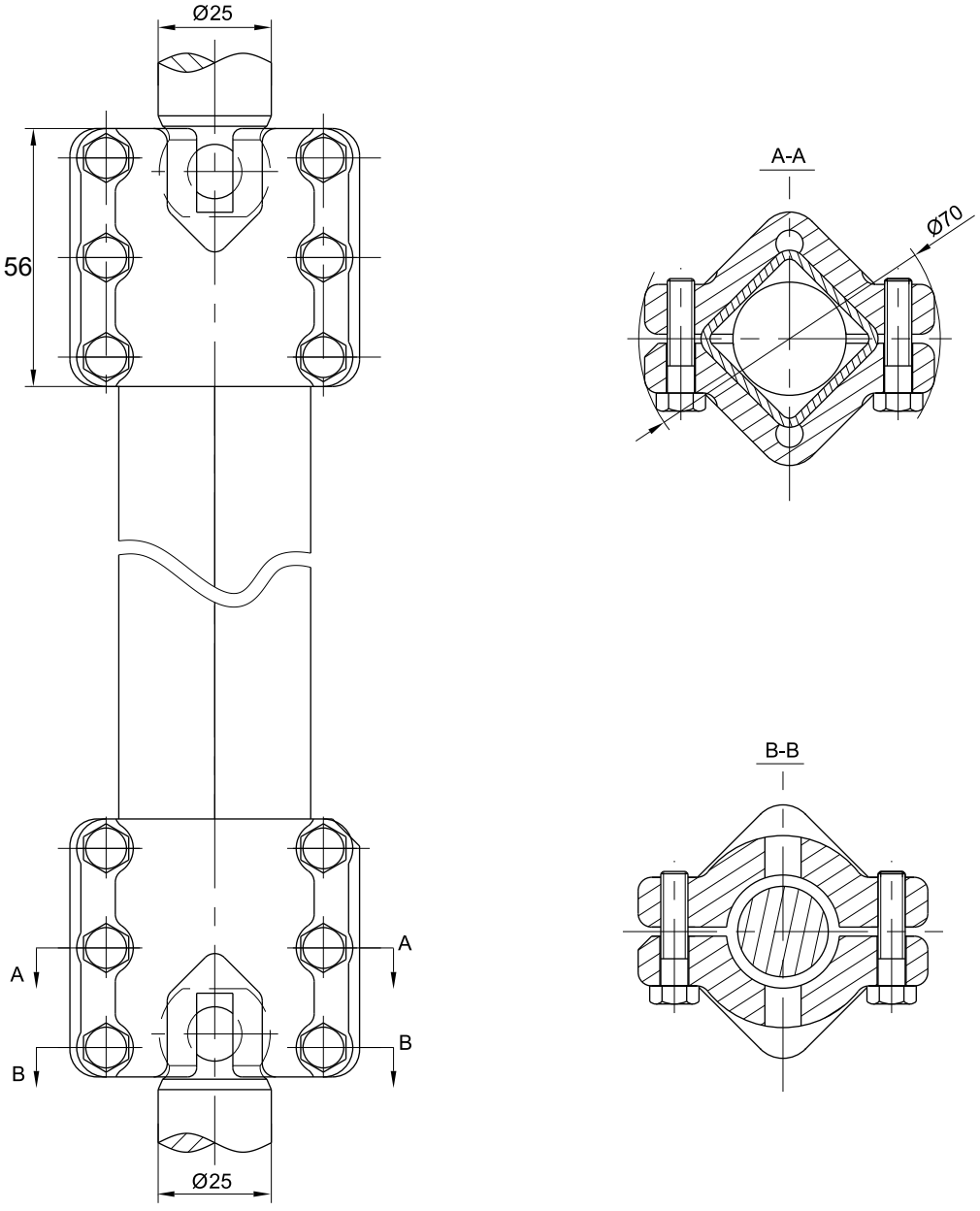

Unit: mm

Appendix 74. Bevel gearbox overall dimension

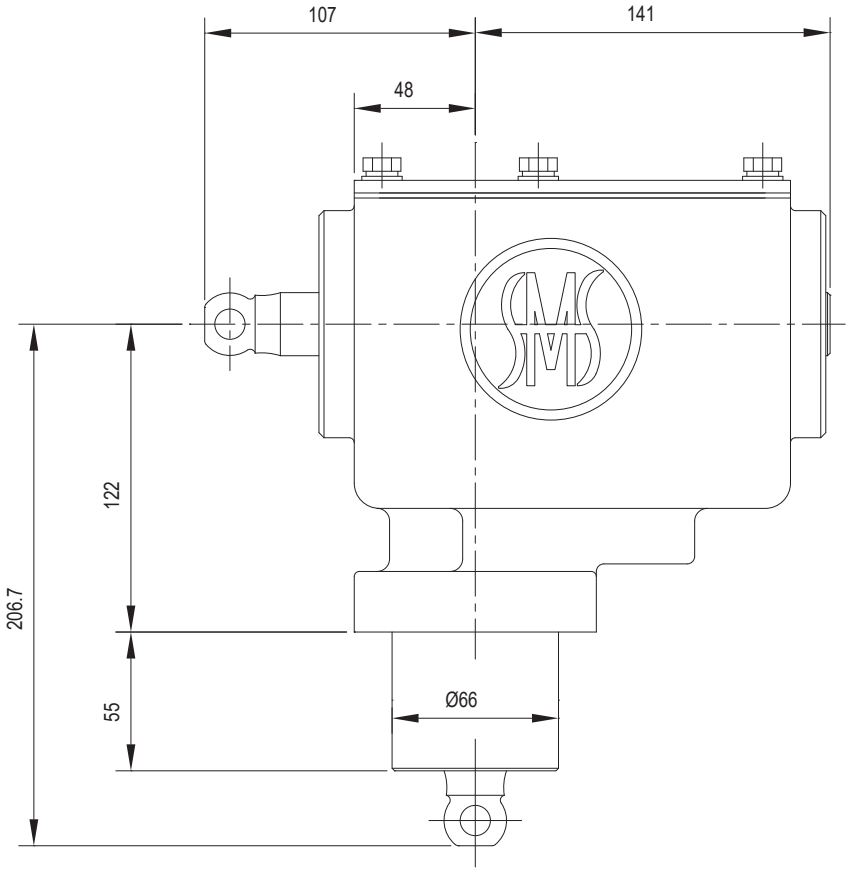

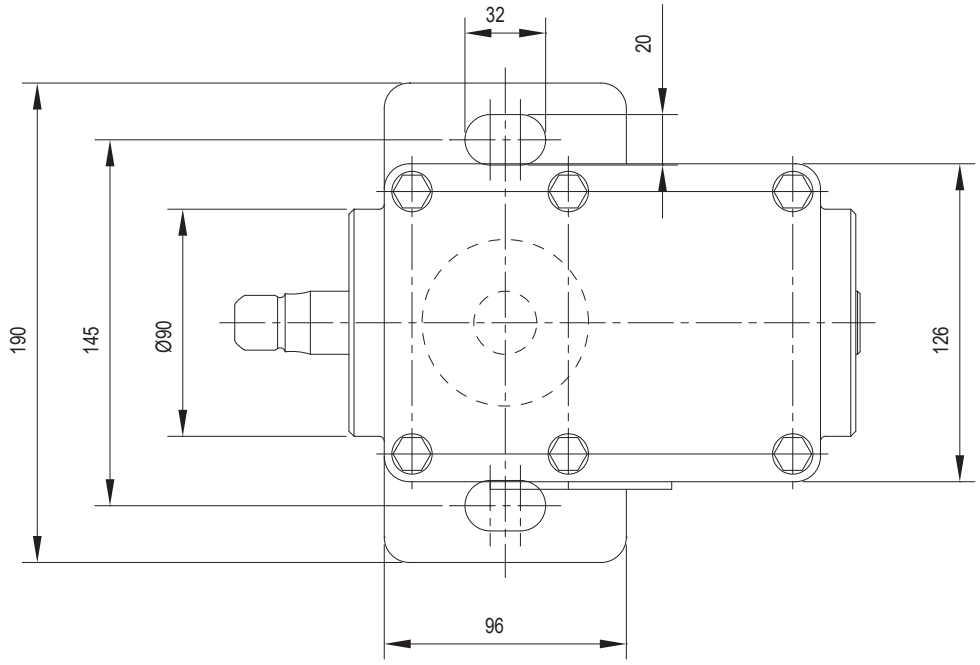

Unit: mm

Appendix 75. Middle supporting box overall dimension

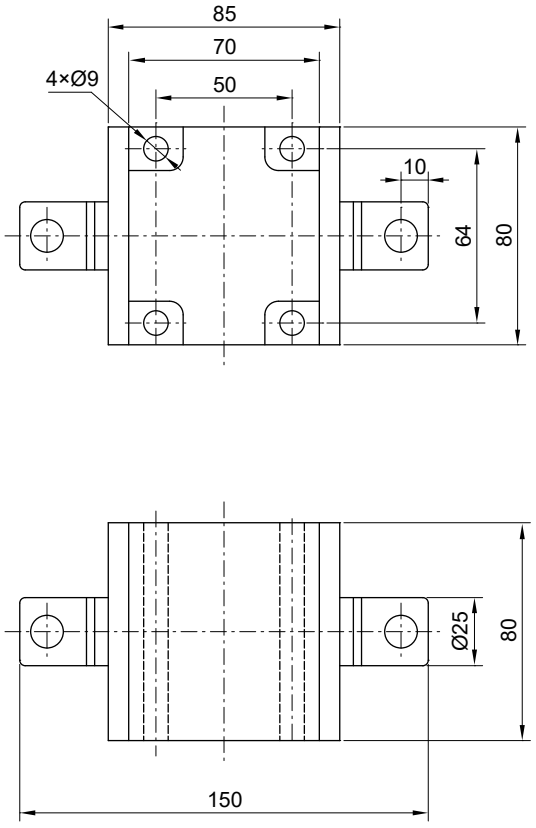

Unit: mm

Appendix 76 . Operation key for oil discharge inside tapchange oil compartment

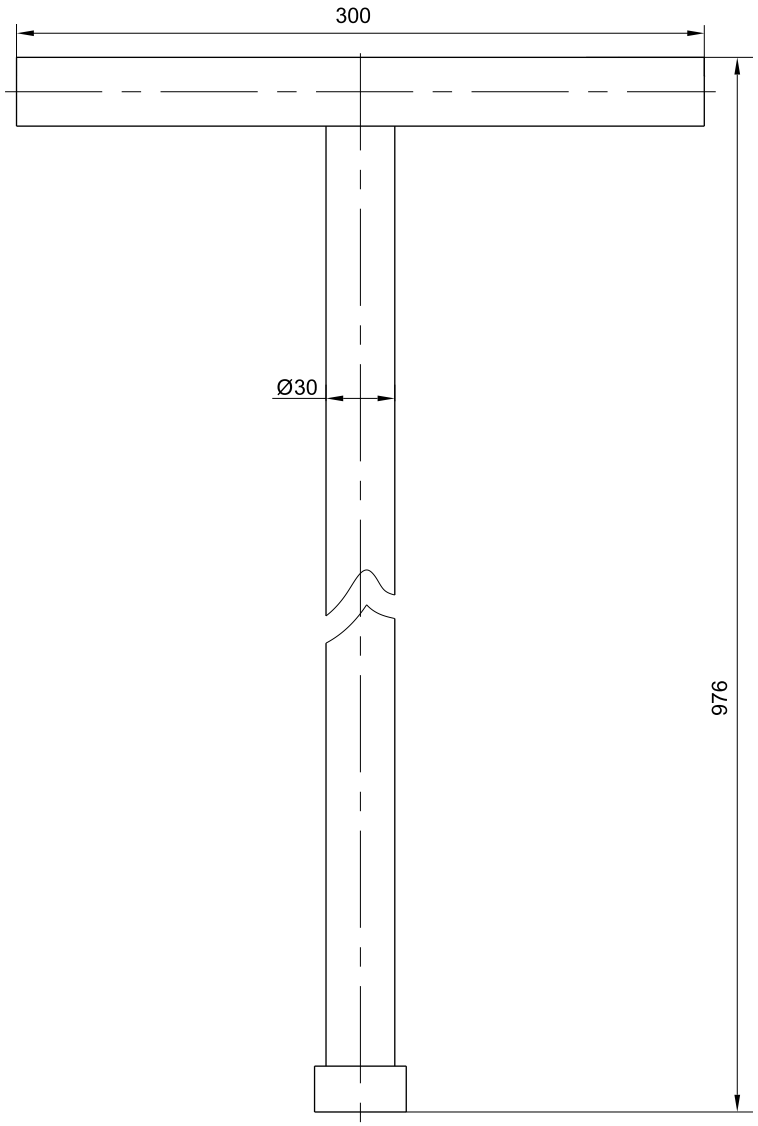

Unit: mm

Appendix 77. Schematic drawing for connecting of SHZV OLTC and MDU

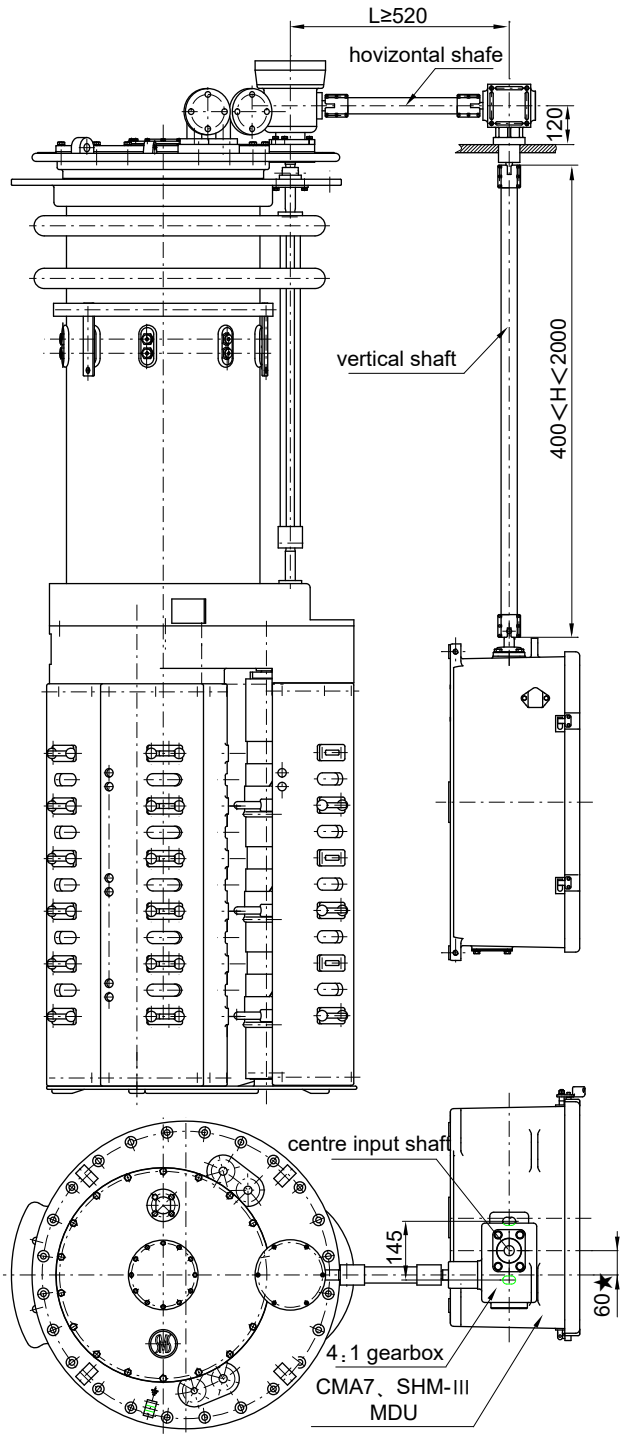

Note: When vertical shaft H>7000mm, Middle supporting box need to be installed (middle supporting box see appendix64)

Unit: mm

Appendix 78. Schematic drawing for 3 units of single-phase SHZV connection arrangement

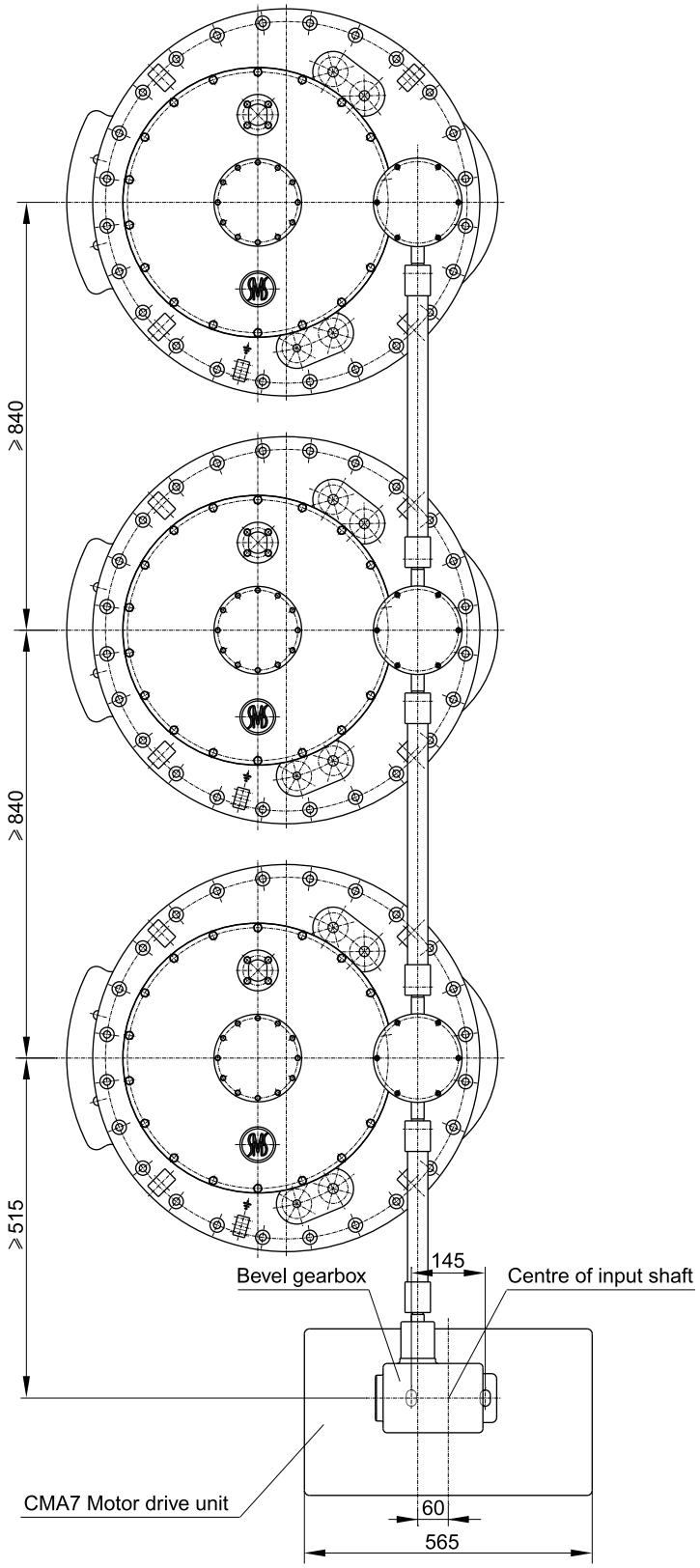

Unit: mm

Appendix 79. Protective relay overall dimension

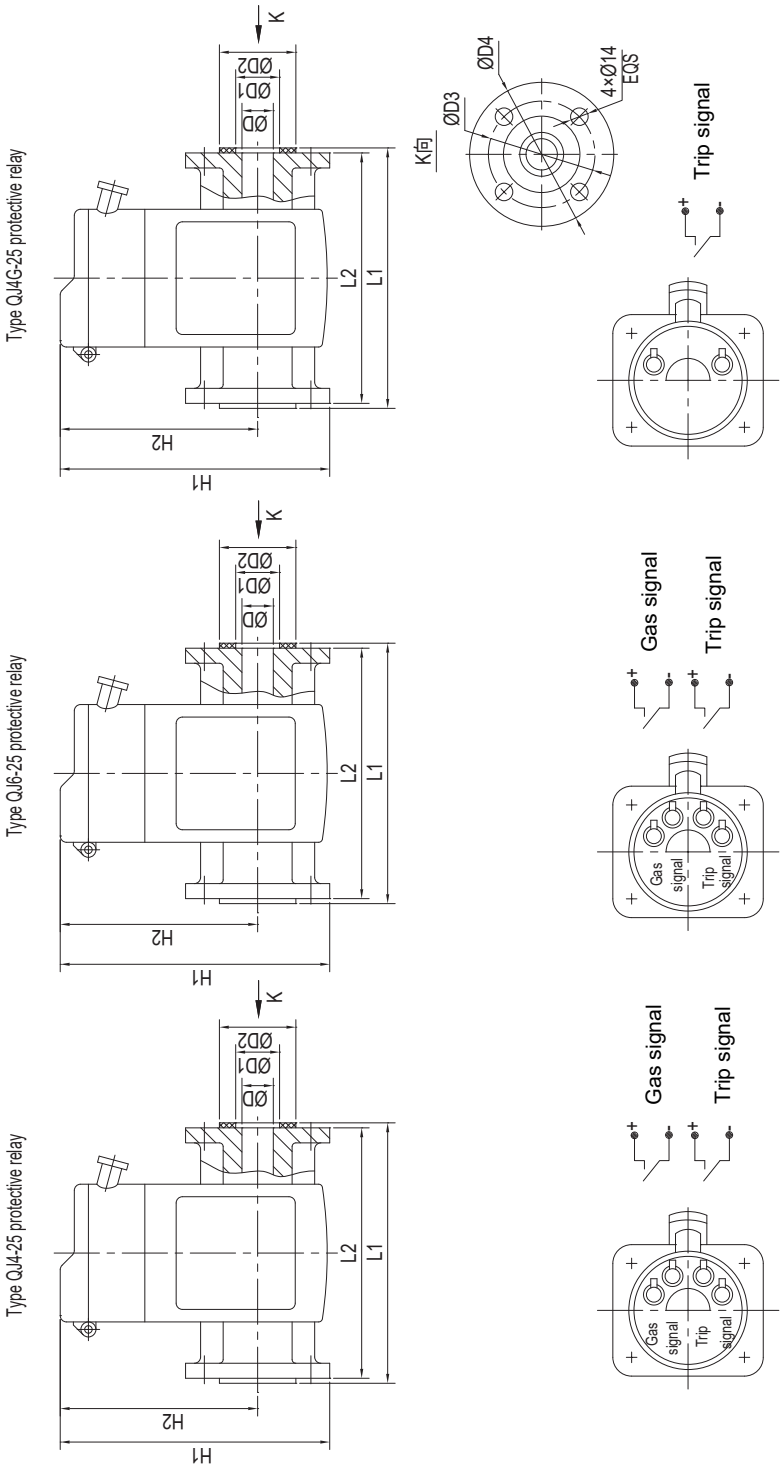

Type	D	D1	D2	D3	D4	d1	H1	H2	L1	L2	Remarks
QJ4-25	25	35	65	85	115	14	215	153	208	200	1 pair of gas signal and 1 pair of trip signal
QJ4G-25	25	35	65	85	115	14	195	133	208	200	1 pair of trip signal
QJ6-25	25	35	65	85	115	14	215	153	208	200	1 pair of gas signal and 1 pair of trip signal

Appendix 80. SHZV bell-type head flange overall dimension, cage tap selector

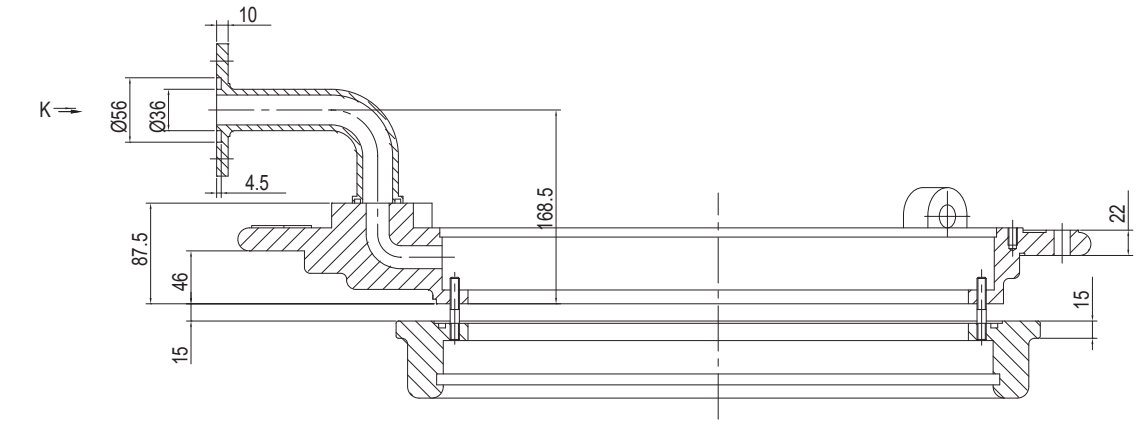

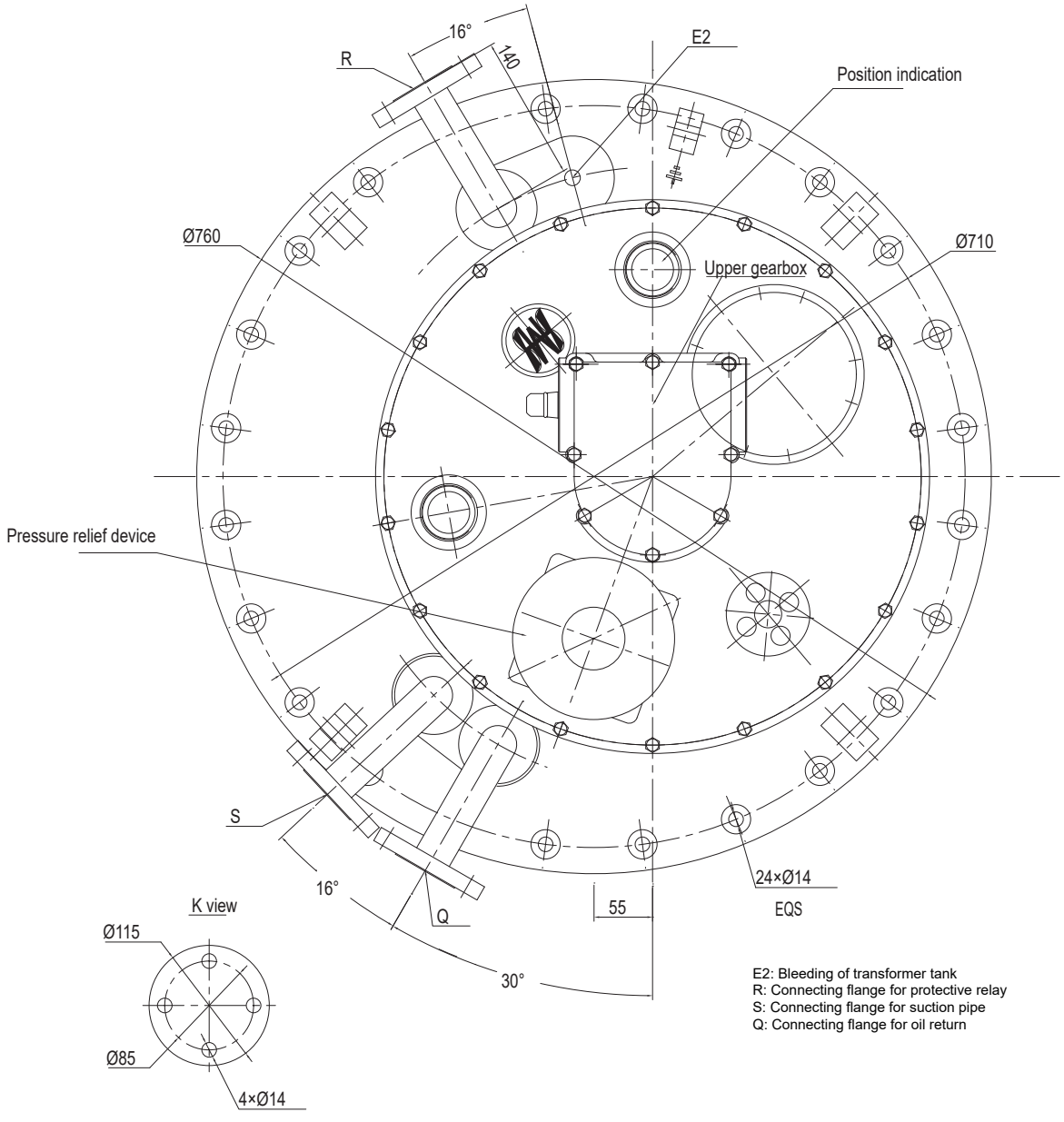

E2: Bleeding of transformer tank
R: Connecting flange for protective relay
S: Connecting flange for suction pipe
Q: Connecting flange for oil return

Unit: mm

Appendix 81. SHZV bell-type supporting flange overall dimension, cage tap selector

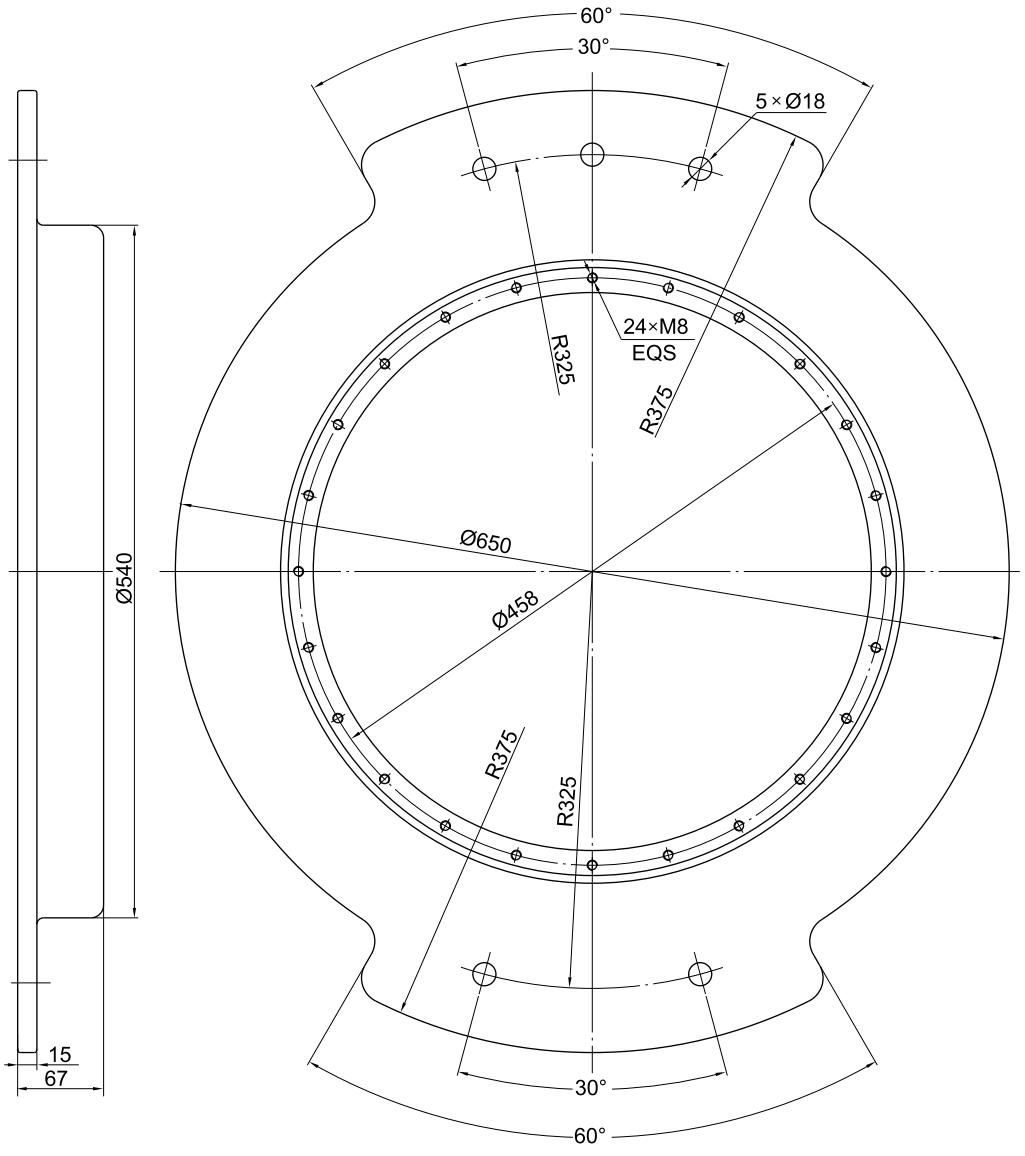

Unit: mm

Appendix 82. SHZV gear mechanism drive shaft position, overall dimension, cage tap selector

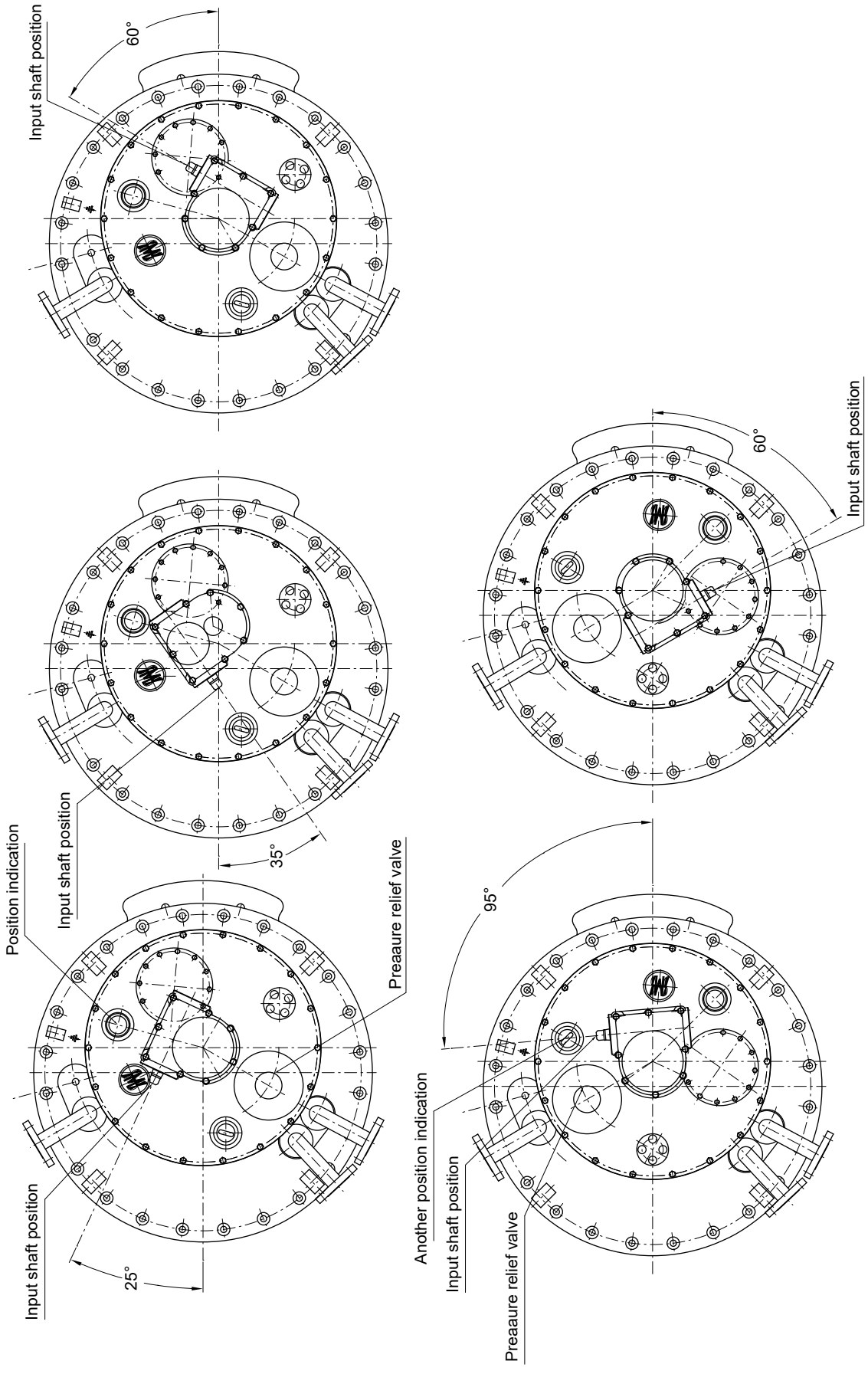

Unit: mm

Appendix 83. SHZV standard tank type supporting lange, overall dimension, cage tap selector

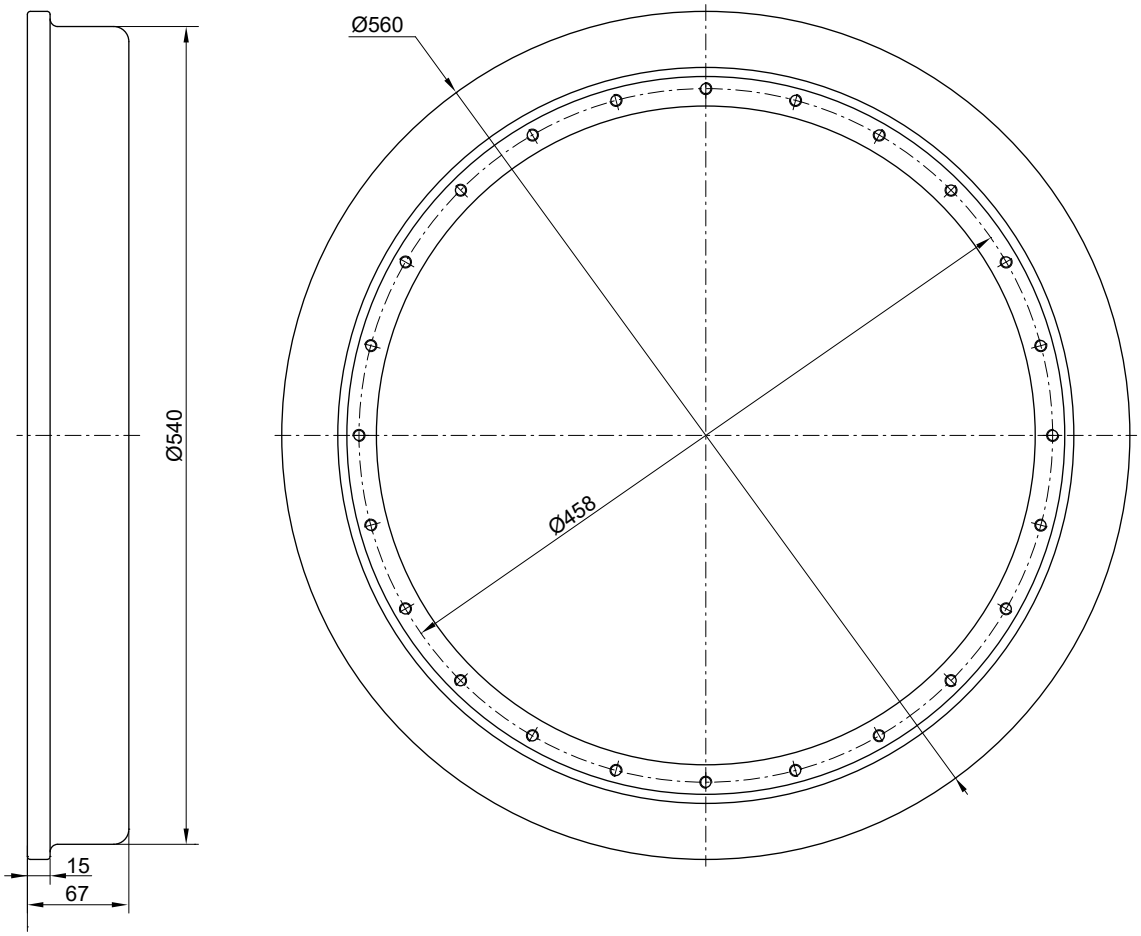

Unit: mm

SHANGHAI HUAMING POWER EQUIPMENT CO., LTD.

Address:977 Tong Pu Road,Shanghai,P.R.China 200333
Tel:+86 21 5270 3965(direct)
+86 21 5270 8966 Ext.
8688/8123/8698/8158/8110/8658
Fax:+86 21 5270 2715
Web:www.huaming.com
E-mail:export@huaming.com

01.08/2012.500